No. 832,354. PATENTED OCT. 2, 1906.

J. A. WILLIAMS.

MAGNETO ELECTRIC GENERATOR.

APPLICATION FILED MAY 14, 1906.

Fig. 1.

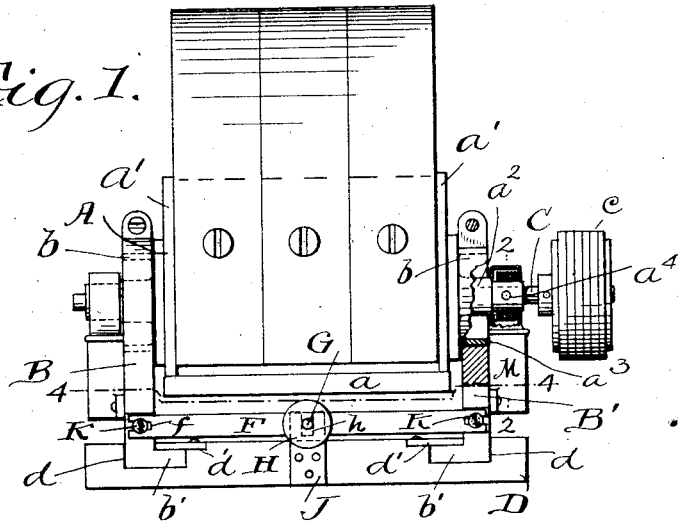

Fig. 3.

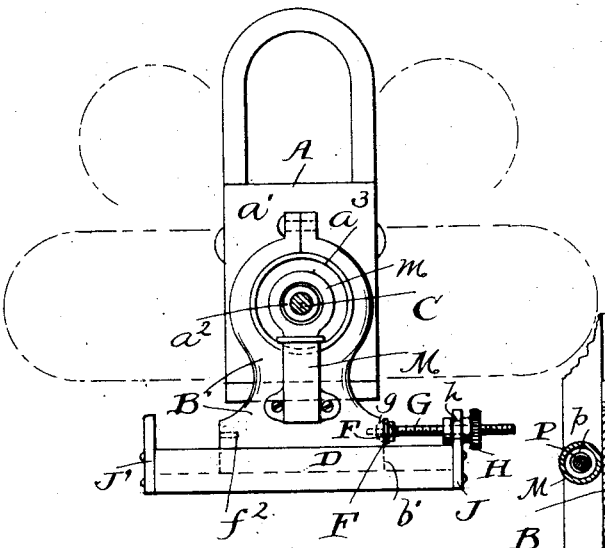

Fig. 2.

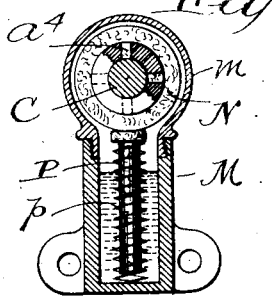

Fig. 4.

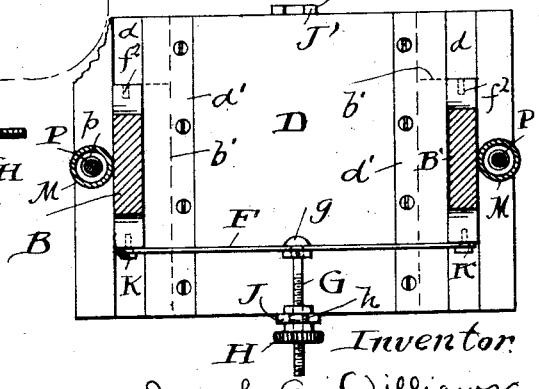

Witnesses.
E. B. Gilchrist
H. R. Sullivan

Inventor
Joseph A. Williams
by
J. Thurston Woodward
Attys