No. 631,354. Patented Aug. 22, 1899.

J. A. WILLIAMS.

TELEPHONE RECEIVER.

(Application filed Apr. 9, 1898.)

(No Model.)

-FIG. I-

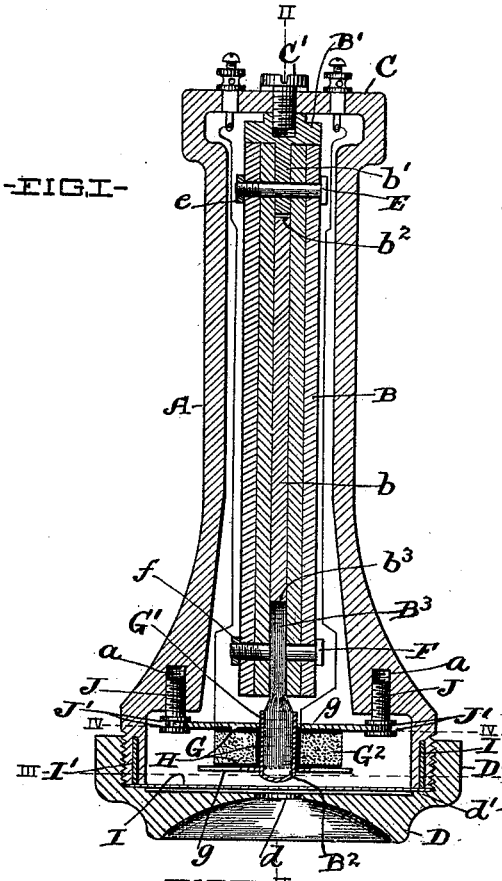

-FIG. II-

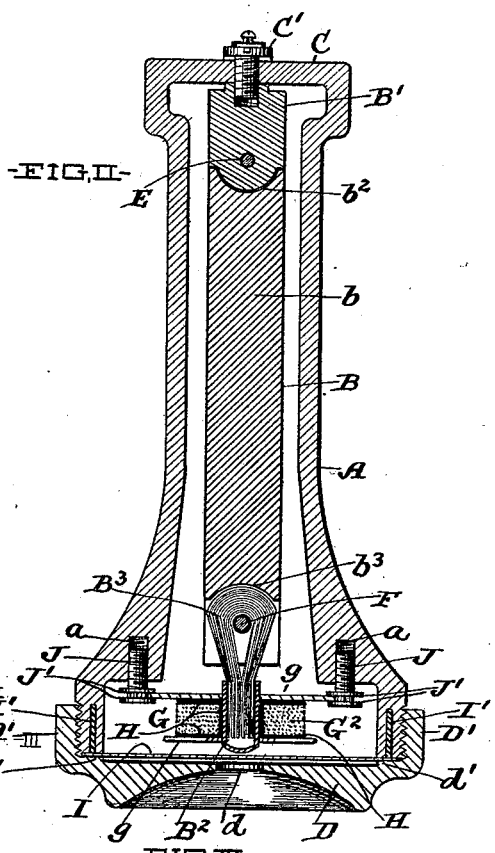

-FIG. III-

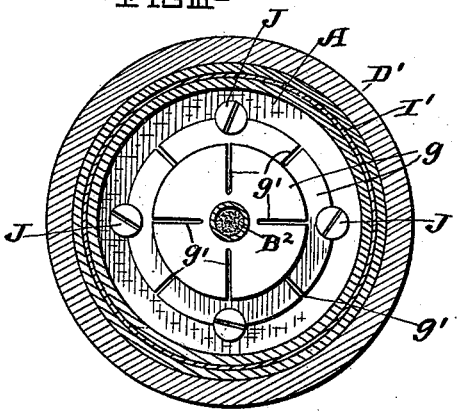

-FIG. IV-

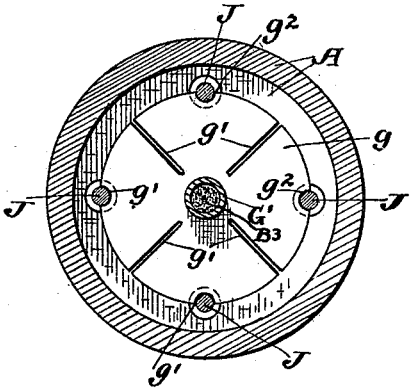

WITNESSES:

Daniel E. Daly

Anna Parratt

INVENTOR

Joseph A. Williams

BY

Lynch, Dorer & Donnelly

his ATTORNEYS

THE NORRIS PETERS CO., PHOTO-LITHO., WASHINGTON, D. C.