J. A. WILLIAMS.

AEROPLANE.

APPLICATION FILED NOV. 1, 1909. RENEWED JAN. 27, 1912.

1,027,954. Patented May 28, 1912.

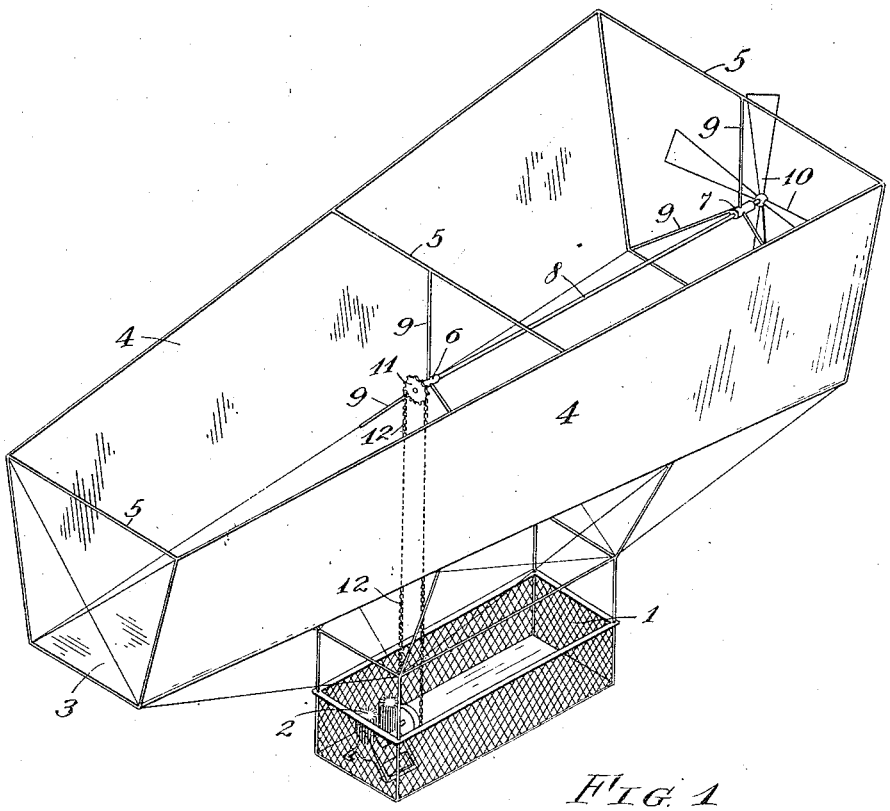

FIG. 1

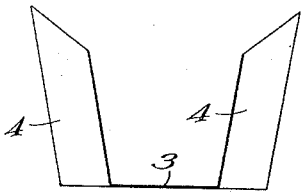

FIG. 2

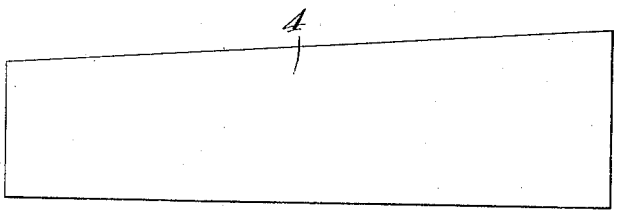

FIG. 3

WITNESSES:
Brennan B. West.
Oliver M. Kappler.

INVENTOR,
Joseph A. Williams,
BY Bates, Fowler & Hull,
ATTYS.