March 18, 1947. W. D. JONES 2,417,554

LOCKING DEVICE FOR AVIATION TRAINERS

Filed March 5, 1945

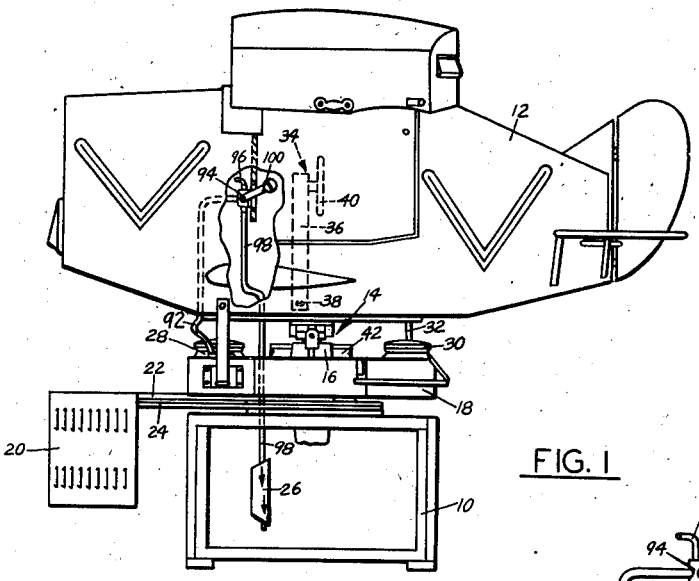

FIG. 1

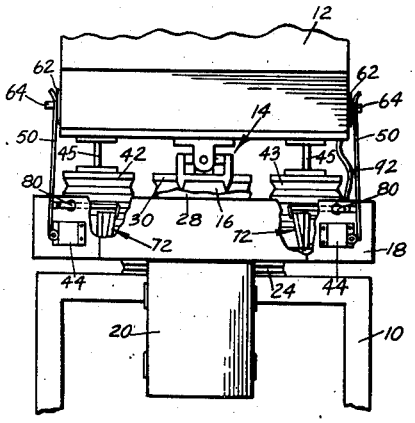

FIG. 3

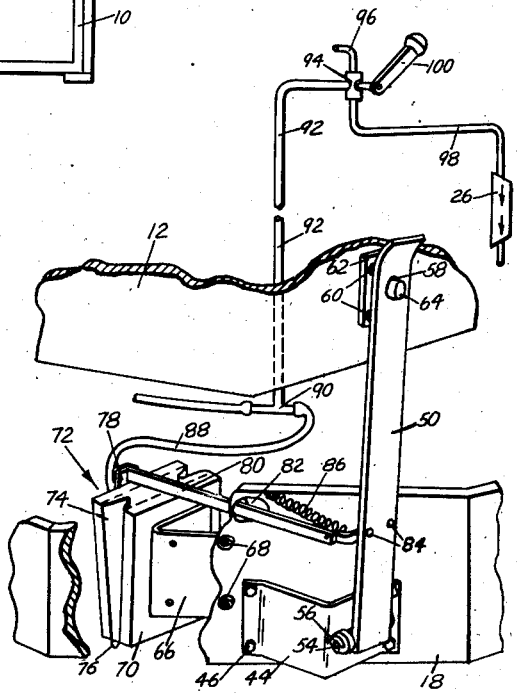

FIG. 2

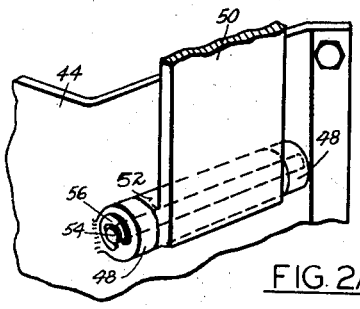

FIG. 2A

WILLIAM D. JONES
INVENTOR.

BY Donald T. Hellier
Philip S. Hopkins
ATTORNEYS