Nov. 12, 1957 J. RABINOW 2,813,154

TELEPHONE CALL INDICATOR

Filed April 16, 1954 2 Sheets-Sheet 1

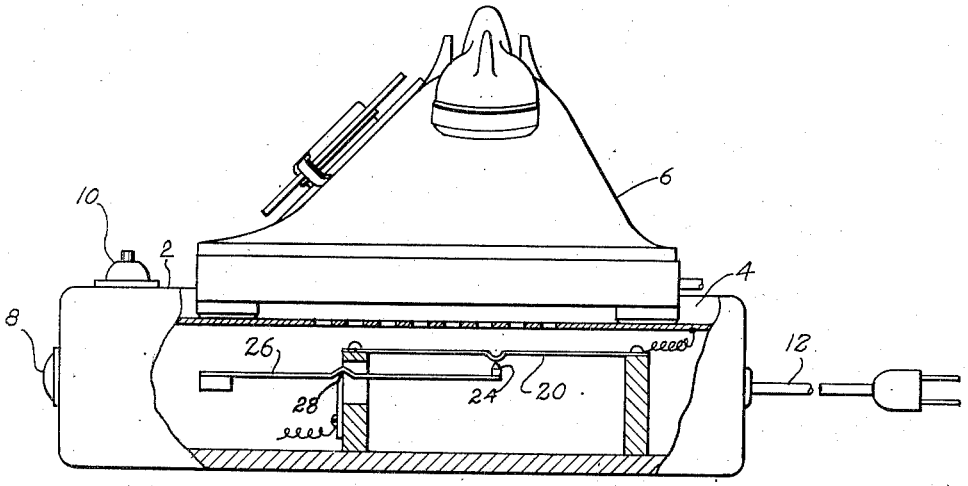

Fig. 1

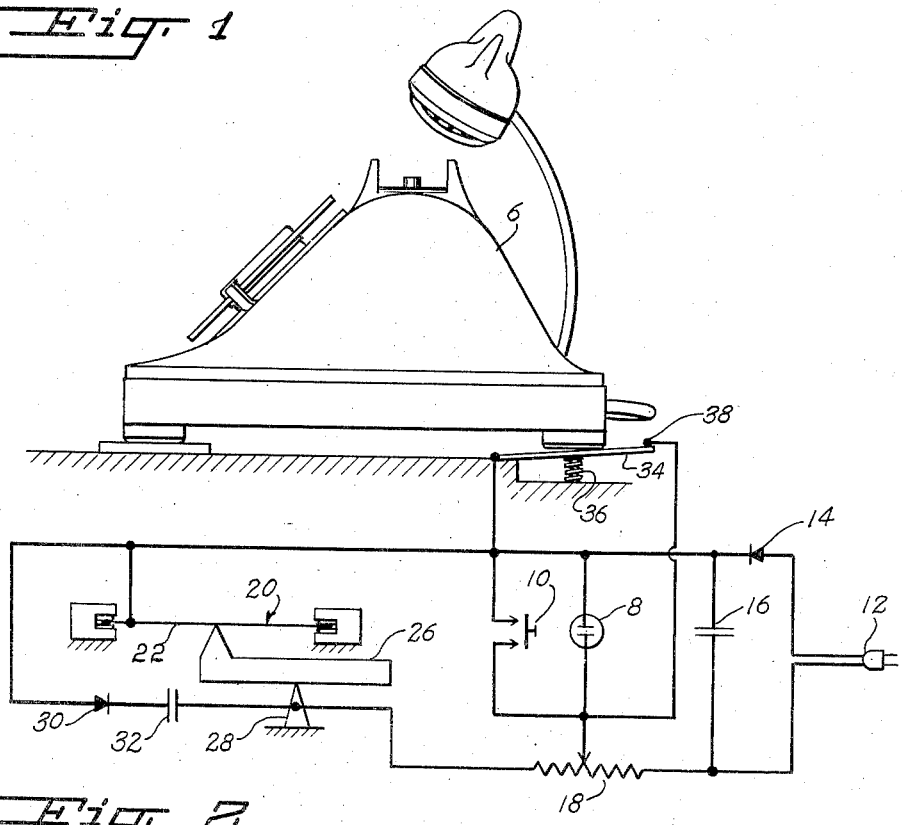

Fig. 2

INVENTOR.
Jacob Rabinow
BY
Max L. Libman
Attorney