US010009554B1

(12) **United States Patent**
Miao et al.

(10) **Patent No.: US 10,009,554 B1**
(45) **Date of Patent: Jun. 26, 2018**

(54) **METHOD AND SYSTEM FOR USING LIGHT EMISSION BY A DEPTH-SENSING CAMERA TO CAPTURE VIDEO IMAGES UNDER LOW-LIGHT CONDITIONS**

(71) Applicant: **Lighthouse AI, Inc.**, Palo Alto, CA (US)

(72) Inventors: **Xiaoyu Miao**, Palo Alto, CA (US); **Daniel Yum**, Santa Cruz, CA (US); **Zachary Lawrence Brand**, Sunnyvale, CA (US); **Hendrik Dahlkamp**, Palo Alto, CA (US)

(73) Assignee: **Lighthouse AI, Inc.**, Palo Alto, CA (US)

(*) Notice: Subject to any disclaimer, the term of this patent is extended or adjusted under 35 U.S.C. 154(b) by 0 days. days.

(21) Appl. No.: **15/442,290**

(22) Filed: **Feb. 24, 2017**

(51) **Int. Cl.**

H04N 7/18	(2006.01)
H04N 5/33	(2006.01)
G06T 7/50	(2017.01)
H04N 5/235	(2006.01)
H04N 5/04	(2006.01)
H04N 5/225	(2006.01)
G01B 11/22	(2006.01)
G01B 11/25	(2006.01)

(52) **U.S. Cl.**
CPC ***H04N 5/33*** (2013.01); ***G01B 11/22*** (2013.01); ***G01B 11/25*** (2013.01); ***G06T 7/50*** (2017.01); ***H04N 5/04*** (2013.01); ***H04N 5/2256*** (2013.01); ***H04N 5/2353*** (2013.01)

(58) **Field of Classification Search**
CPC H04N 5/33
See application file for complete search history.

(56) **References Cited**

U.S. PATENT DOCUMENTS

6,348,302	B1 *	2/2002	Kosugi	G03C 5/04 430/350
2008/0158348	A1 *	7/2008	Karpen	A61B 1/00036 348/82
2009/0099761	A1 *	4/2009	Davis	G08G 5/0026 701/120
2011/0317005	A1 *	12/2011	Atkinson	G01S 17/023 348/135
2012/0229674	A1 *	9/2012	Solomon	H04N 5/772 348/231.99
2014/0072211	A1 *	3/2014	Kovesi	G06T 7/90 382/164

* cited by examiner

Primary Examiner — Md Haque
(74) *Attorney, Agent, or Firm* — Chamberlain, Hrdlicka, White, Williams & Aughtry

(57) **ABSTRACT**

In general, embodiments of the invention relate to a method for capturing video frames. The method includes obtaining a depth-data frame of an environment using a depth-sensing camera and an infrared illuminator, where the environment is illuminated by an illumination pattern emitted by the infrared illuminator, obtaining, an infrared illuminator parameterization for the illumination pattern emitted by the infrared illuminator, obtaining a desired frame exposure time, based on a desired frame exposure, determining, based on the infrared illuminator parameterization and the desired frame exposure time, an actual frame exposure time, and after determining the actual frame exposure time, obtaining a frame of the environment using the actual frame exposure time using the infrared illuminator with the illumination pattern.
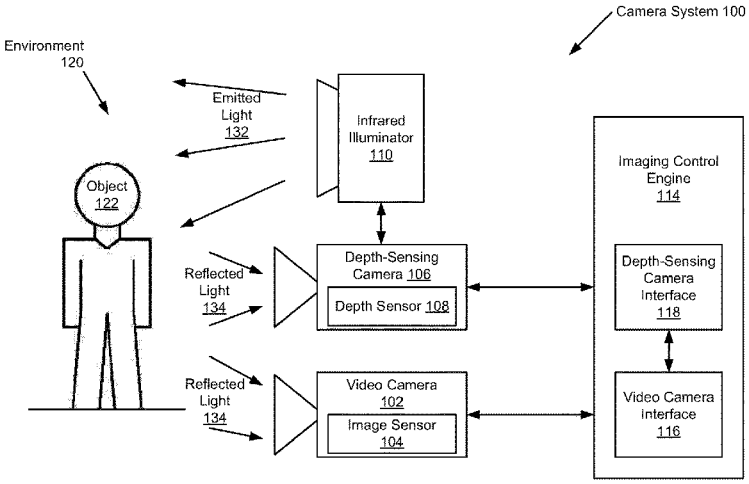
20 Claims, 6 Drawing Sheets