May 20, 1952 F. C. MELCHIOR 2,597,253

JET-PROPULSION NOZZLE

Filed Nov. 13, 1945 3 Sheets-Sheet 1

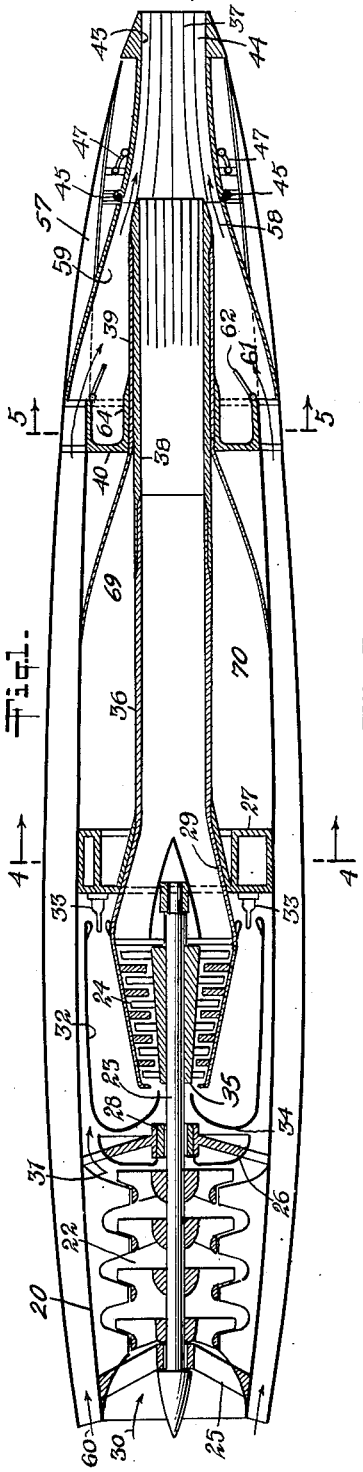

Fig. 1.

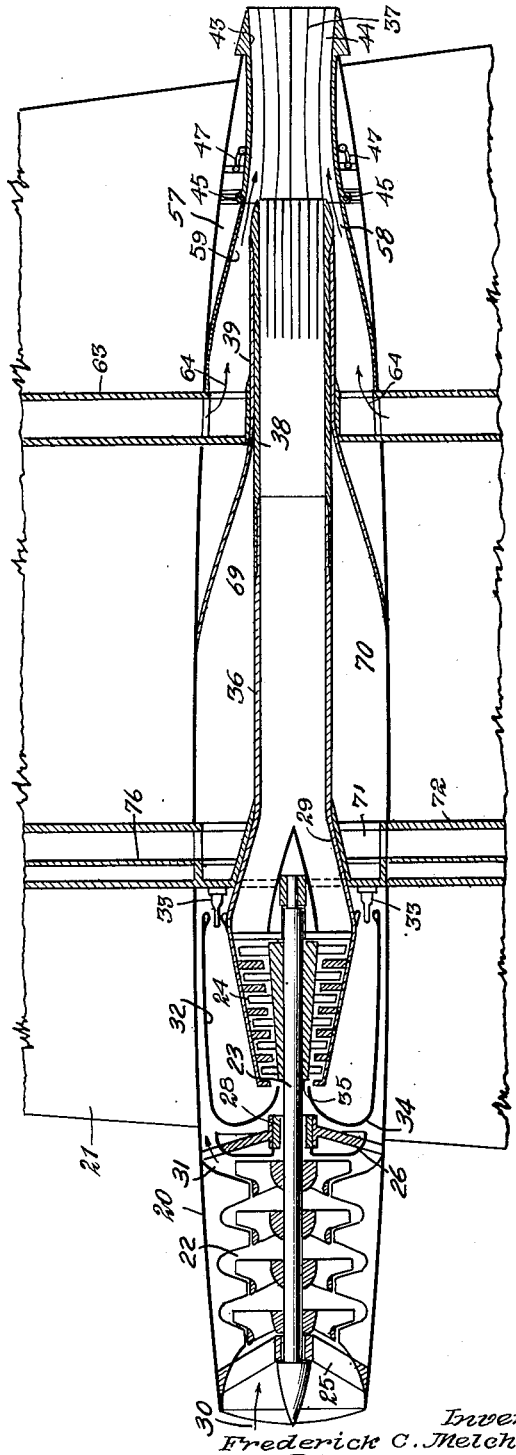

Fig. 2.

Inventor
Frederick C. Melchior
By
Munn, Liddy & Glascum
Attorneys