US00D796653S

(12) United States Design Patent

Hsu

(10) Patent No.: US D796,653 S
(45) Date of Patent: ** Sep. 5, 2017

(54) **DISPOSABLE BATHTUB LINER**

(71) Applicant: **Wei K. Hsu**, Plano, TX (US)

(72) Inventor: **Wei K. Hsu**, Plano, TX (US)

(**) Term: **15 Years**

(21) Appl. No.: **29/547,658**

(22) Filed: **Dec. 7, 2015**

(51) **LOC (10) Cl.** **23-02**

(52) **U.S. Cl.**
USPC **D23/304**

(58) **Field of Classification Search**
USPC D23/304, 278; D6/611
CPC A47K 3/001; A47K 3/002; A47K 3/06; Y10S 4/18; A61G 7/0005
See application file for complete search history.

(56) **References Cited**

U.S. PATENT DOCUMENTS

3,931,651 A * 1/1976 Weir A47K 3/001 4/580
4,158,585 A * 6/1979 Wright A47K 3/001 156/245
5,216,764 A * 6/1993 Hall A47K 3/001 4/244.3
5,742,955 A * 4/1998 Parkay A47K 3/002 4/583
6,085,367 A * 7/2000 Guiste A47K 3/002 4/546
D528,195 S * 9/2006 Stevenson D23/304

* cited by examiner

Primary Examiner — Robert Delehanty
(74) *Attorney, Agent, or Firm* — Eldredge Law Firm; Richard G. Eldredge

(57) **CLAIM**

The ornamental design for a disposable bathtub liner, as shown and described.

DESCRIPTION

FIG. **1** is an oblique view of a disposable bathtub liner according to the present application.
FIG. **2** is a top view of the disposable bathtub liner according to the present application; and,
FIG. **3** is a side view of the disposable bathtub liner according to the present application.
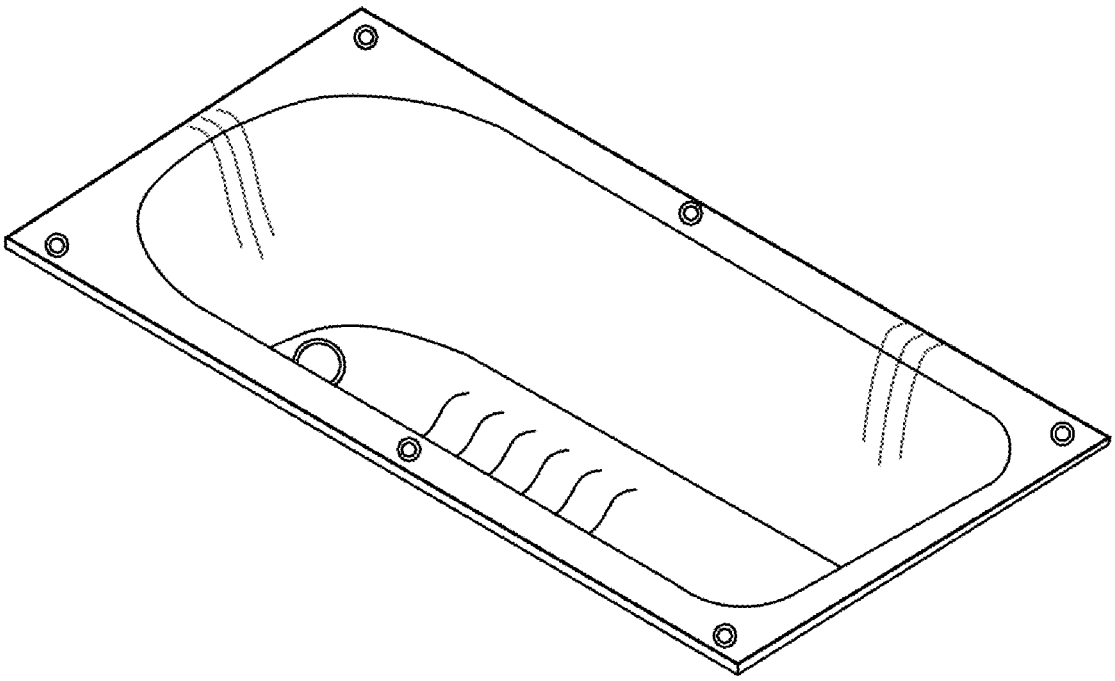
1 Claim, 2 Drawing Sheets