(Model.)

S. BOONE.

IRONING BOARD.

No. 473,653. Patented Apr. 26, 1892.

Fig. 1

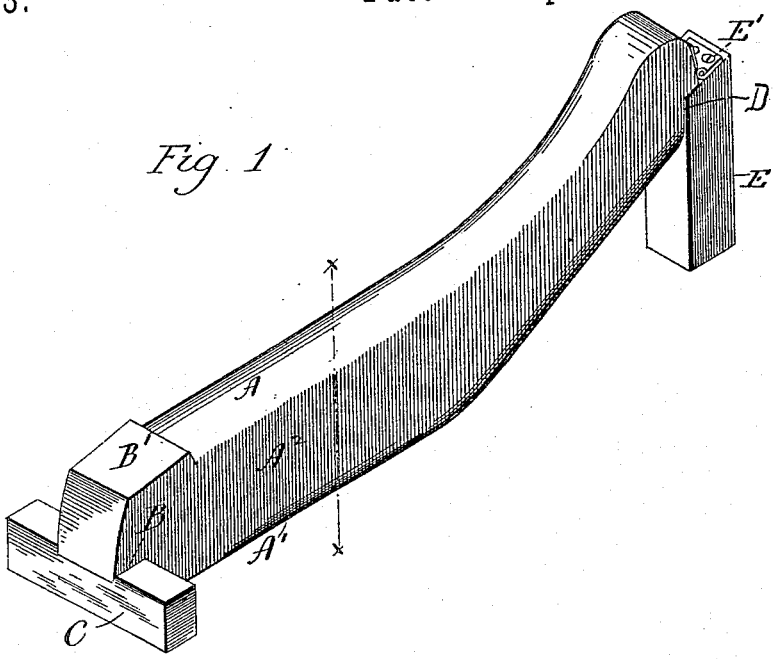

Fig. 2

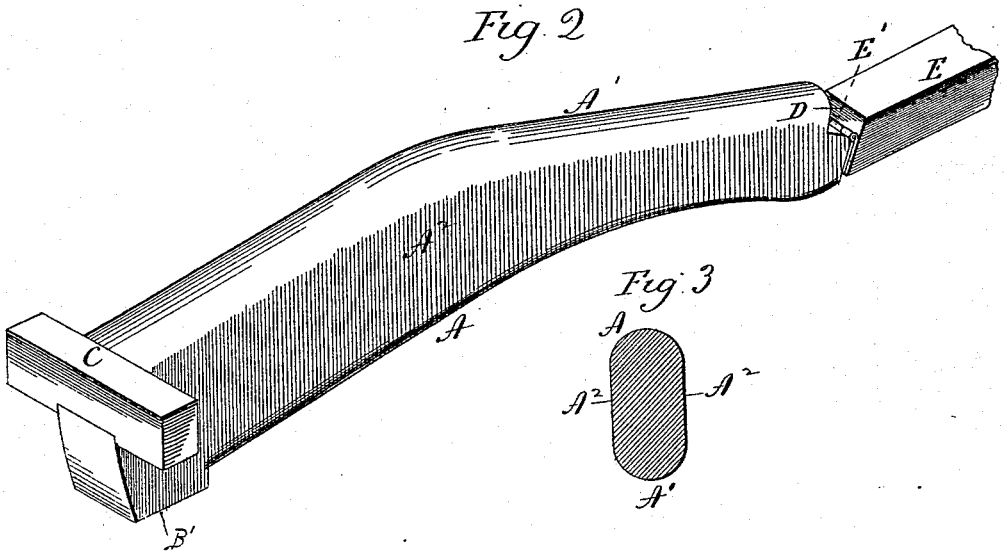

Fig. 3

Witnesses
J. H. Shimmway
Lillian D. Kelsey

Sarah Boone
Inventor
By atty. Earle Seymour

THE NORRIS PETERS CO., PHOTO-LITHO., WASHINGTON, D. C.