United States Patent [19]
Myer
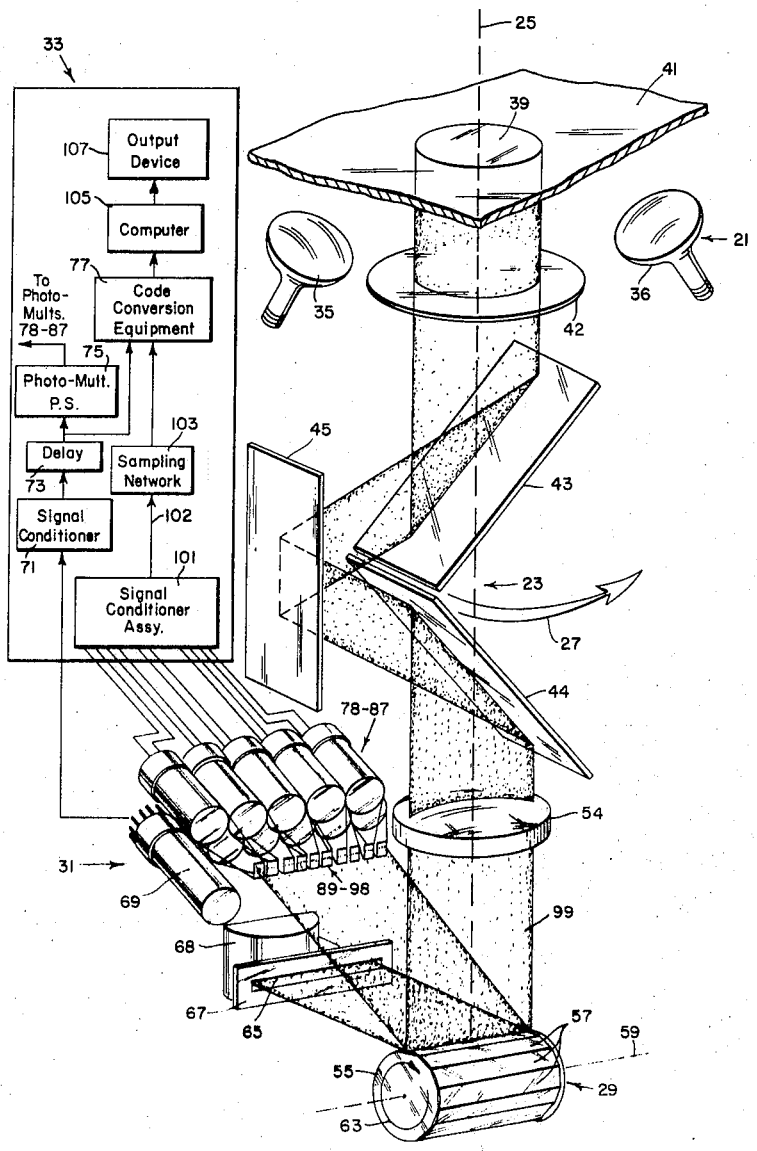
[11] **3,758,753**
[45] **Sept. 11, 1973**