US009893452B2

(12) **United States Patent**
Wagman et al.

(10) **Patent No.: US 9,893,452 B2**
(45) **Date of Patent: Feb. 13, 2018**

(54) **LOW-PROFILE SPRING-LOADED CONTACTS**

(71) Applicant: **Apple Inc.**, Cupertino, CA (US)

(72) Inventors: **Daniel C. Wagman**, Los Gatos, CA (US); **Eric S. Jol**, San Jose, CA (US)

(73) Assignee: **Apple Inc.**, Cupertino, CA (US)

(*) Notice: Subject to any disclaimer, the term of this patent is extended or adjusted under 35 U.S.C. 154(b) by 0 days.

(21) Appl. No.: **15/138,224**

(22) Filed: **Apr. 26, 2016**

(65) **Prior Publication Data**

US 2017/0069993 A1 Mar. 9, 2017

Related U.S. Application Data

(60) Provisional application No. 62/215,592, filed on Sep. 8, 2015.

(51) **Int. Cl.**

H01R 13/44	(2006.01)
H01R 13/24	(2006.01)
H01R 13/41	(2006.01)
H01R 43/16	(2006.01)
H01R 43/20	(2006.01)
H01R 13/428	(2006.01)

(52) **U.S. Cl.**

CPC ***H01R 13/2442*** (2013.01); ***H01R 13/2421*** (2013.01); ***H01R 13/41*** (2013.01); ***H01R 13/428*** (2013.01); ***H01R 43/16*** (2013.01); ***H01R 43/20*** (2013.01); *H01R 13/2471* (2013.01); *H01R 13/2478* (2013.01)

(58) **Field of Classification Search**

CPC H01R 13/4536; H01R 13/447; H01R 13/65802; H01R 11/288

USPC 439/138, 136, 892, 95, 910

See application file for complete search history.

(56) **References Cited**

U.S. PATENT DOCUMENTS

5,213,314	A	5/1993	Kano et al.	
5,295,844	A *	3/1994	Koshikawa	H01R 13/6485 439/138
5,980,335	A	11/1999	Barbieri et al.	
7,306,494	B2 *	12/2007	Soh	H01R 13/2442 439/862
7,661,968	B1 *	2/2010	Duan	H01R 13/2442 439/135
8,066,518	B2	11/2011	Homme et al.	
8,344,836	B2	1/2013	Lauder	
8,427,825	B2	4/2013	Szczypinski	

(Continued)

FOREIGN PATENT DOCUMENTS

CN	101755368 A	6/2010
JP	H0577772 U	10/1993

(Continued)

OTHER PUBLICATIONS

Ex parte Quayle Action dated Jun. 27, 2017 in U.S. Appl. No. 15/256,470, 8 pages.

(Continued)

Primary Examiner — Phuongchi T Nguyen

(74) *Attorney, Agent, or Firm* — Kilpatrick Townsend & Stockton, LLP

(57) **ABSTRACT**

Contact structures that are readily manufactured, where contacts in the contact structures provide a sufficient normal force while consuming a minimal amount of surface area, depth, and volume in an electronic device.
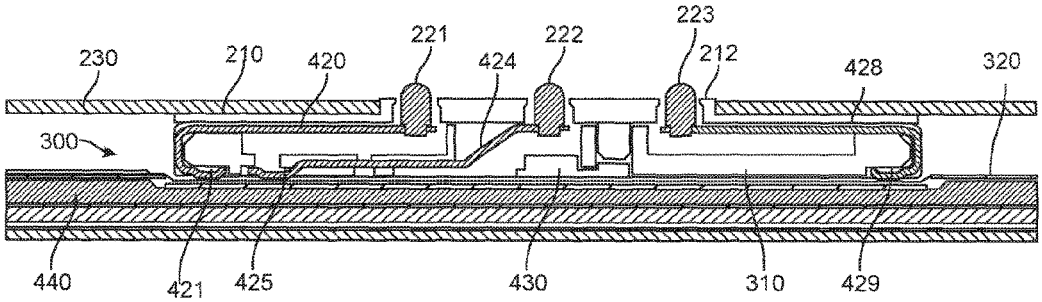
18 Claims, 17 Drawing Sheets