T350/286

Nov. 1, 1966 J. H. MYER 3,282,152

SIGNALMENT RECORDING APPARATUS

Filed April 15, 1964 3 Sheets-Sheet 1

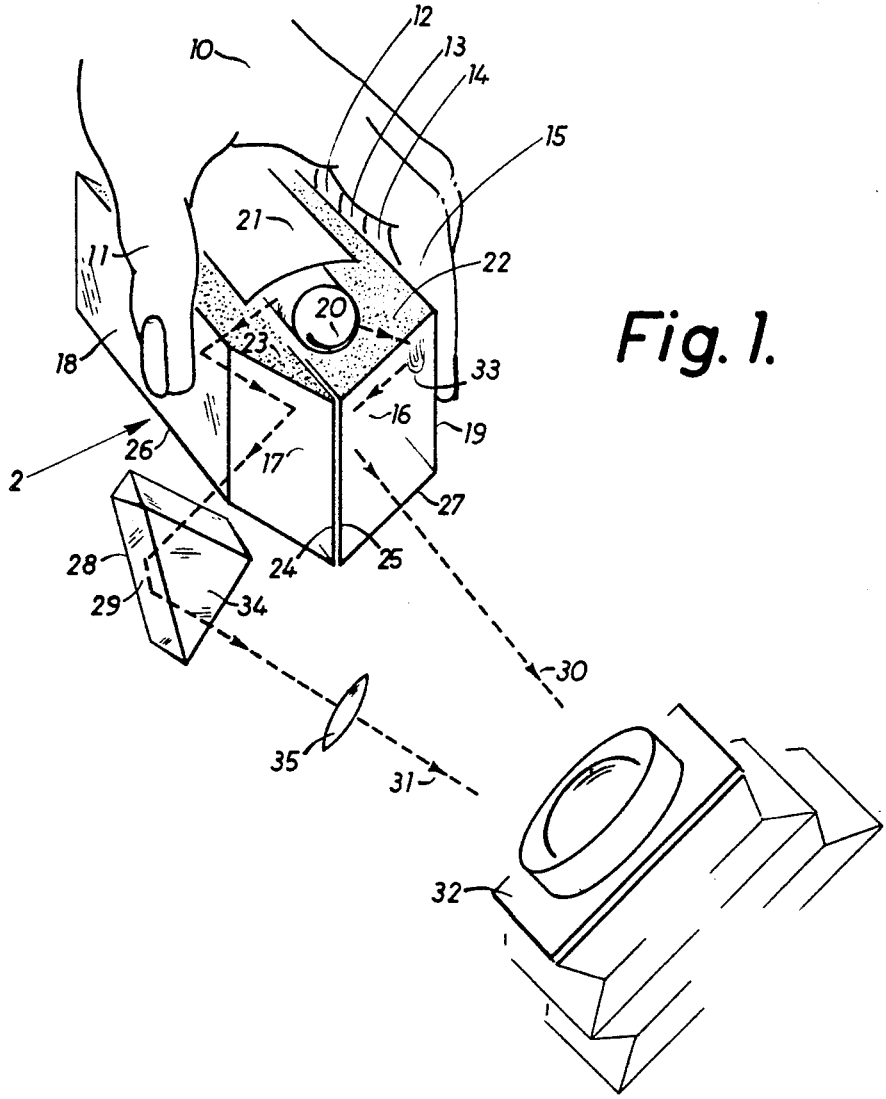

Fig. 1.

T 35 /

x 7007

INVENTOR.

John H. Myer