US008365452B2

(12) **United States Patent**
Goldman

(10) **Patent No.: US 8,365,452 B2**
(45) **Date of Patent: Feb. 5, 2013**

(54) **DISPLAY FRAME**

(75) Inventor: **Benjamin A. Goldman**, Weehawken, NJ (US)

(73) Assignee: **United Visual Arts, LLC**, Weehawken, NJ (US)

(*) Notice: Subject to any disclaimer, the term of this patent is extended or adjusted under 35 U.S.C. 154(b) by 383 days.

(21) Appl. No.: **11/776,100**

(22) Filed: **Jul. 11, 2007**

(65) **Prior Publication Data**

US 2008/0010887 A1 Jan. 17, 2008

Related U.S. Application Data

(63) Continuation-in-part of application No. 11/381,280, filed on Jun. 8, 2006, now abandoned.

(60) Provisional application No. 60/677,290, filed on May 3, 2005, provisional application No. 60/729,618, filed on Oct. 24, 2005.

(51) **Int. Cl.**
A47G 1/06 (2006.01)

(52) **U.S. Cl.** **40/781**; 40/771

(58) **Field of Classification Search** 40/704, 40/706, 774, 772, 777, 661, 705
See application file for complete search history.

(56) **References Cited**

U.S. PATENT DOCUMENTS

2,361,479	A	*	10/1944	Joffo	40/204
2,823,478	A	*	2/1958	Ostergaard et al.	40/707
2,837,854	A	*	6/1958	Bing et al.	40/706
2,874,498	A	*	2/1959	Butkevich	40/705
3,369,451	A	*	2/1968	Brandt et al.	40/704
4,165,572	A	*	8/1979	Sussman	40/661
4,249,328	A	*	2/1981	Plumadore	40/702
4,332,095	A	*	6/1982	Tanney	40/771
4,351,123	A		9/1982	Cross	
4,387,807	A	*	6/1983	de la Rosa	206/312
4,903,829	A	*	2/1990	Clemens	206/308.1
4,979,619	A	*	12/1990	Hager	206/509
4,984,798	A		1/1991	Silberstein	
5,148,618	A	*	9/1992	Brewster	40/626
5,385,231	A	*	1/1995	Nowotny	206/309
5,699,913	A	*	12/1997	Richardson	206/470
5,713,463	A	*	2/1998	Lakoski et al.	206/308.1
6,070,350	A	*	6/2000	Fantone et al.	40/454
6,253,473	B1		7/2001	Collins	
6,470,612	B1		10/2002	Pountney	

FOREIGN PATENT DOCUMENTS

DE	29801466 U1	4/1998
EP	1627585 A1	2/2006

* cited by examiner

Primary Examiner — Tashiana Adams
Assistant Examiner — Christopher E Veraa
(74) *Attorney, Agent, or Firm* — Lucas & Mercanti, LLP

(57) **ABSTRACT**

The display frame has a transparent front and back panel with friction clamps that interact to close the frame around a content, or has a transparent folded outer glazing that holds an inside assembly around a content. The frictional clamp and the folded outer glazing and inside assembly allow the frame to be opened and the content to be replaced. A hanging-bumper device protrudes from the back of the frame either as an integral component of the back panel, outer glazing, or inside assembly, or as a removable attachment.
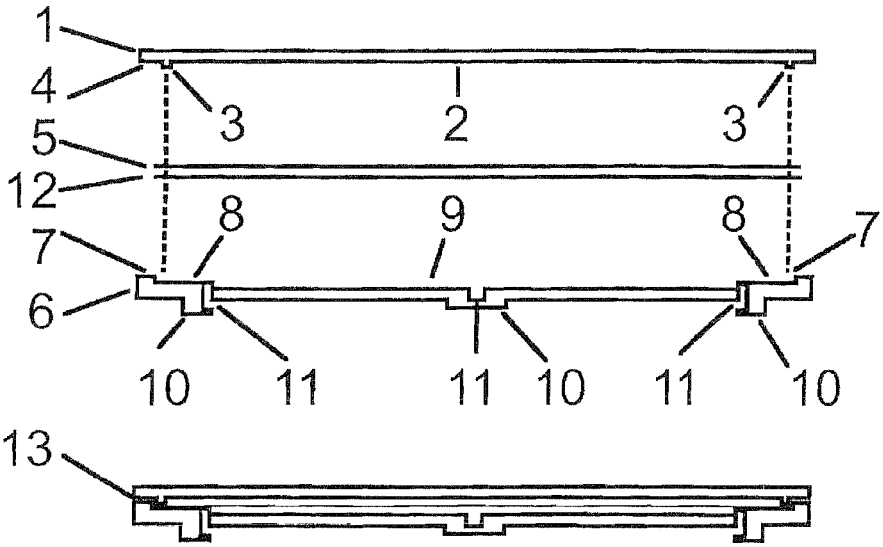
4 Claims, 31 Drawing Sheets