Oct. 18, 1932. O. STAMETS ET AL 1,883,051

CONTROL FOR MOTOR DRIVEN APPARATUS

Filed May 31, 1930 3 Sheets-Sheet 1

Fig. 1.

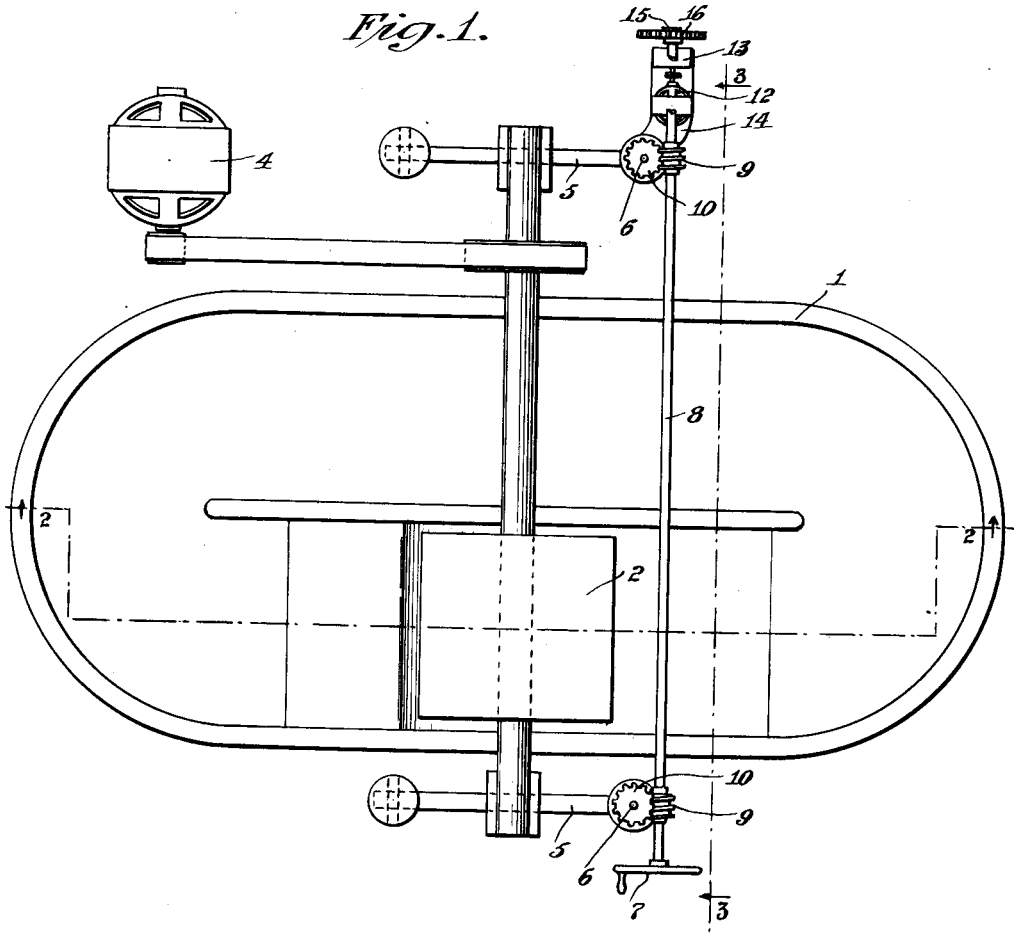

Fig. 2.

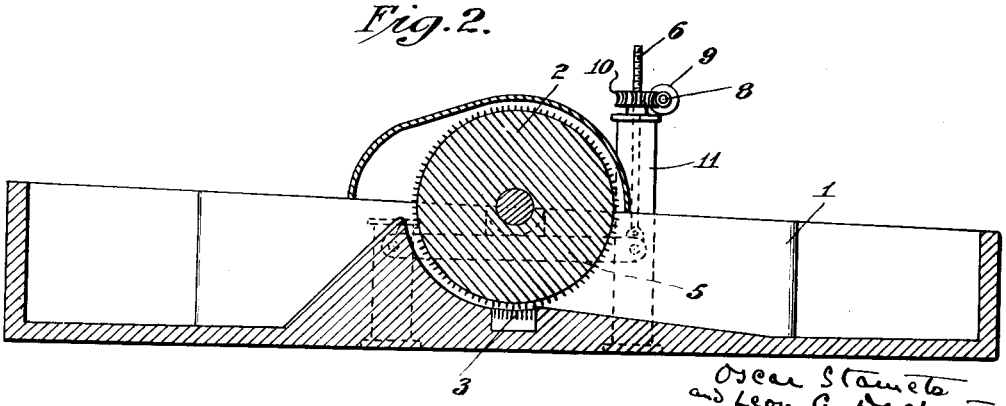

Oscar Stamets
and Leon A. Deckworth
INVENTORS

BY W. B. Whitney
ATTORNEY