US009975651B1

(12) **United States Patent**
Eck et al.

(10) **Patent No.: US 9,975,651 B1**
(45) **Date of Patent: May 22, 2018**

(54) **TRANSFER STATION FOR TRANSFERRING CONTAINERS BETWEEN UNMANNED AERIAL VEHICLES AND UNMANNED GROUND VEHICLE**

(71) Applicants: **Brandon Eck**, Washington, DC (US); **Brett Wagner**, Washington, DC (US)

(72) Inventors: **Brandon Eck**, Washington, DC (US); **Brett Wagner**, Washington, DC (US)

(*) Notice: Subject to any disclaimer, the term of this patent is extended or adjusted under 35 U.S.C. 154(b) by 0 days. days.

(21) Appl. No.: **15/416,639**

(22) Filed: **Jan. 26, 2017**

(51) **Int. Cl.**

B65G 67/04	(2006.01)
B64F 1/32	(2006.01)
B64C 39/02	(2006.01)
B64D 1/22	(2006.01)

(52) **U.S. Cl.**
CPC ***B64F 1/32*** (2013.01); ***B64C 39/024*** (2013.01); ***B64D 1/22*** (2013.01); ***B65G 67/04*** (2013.01); *B64C 2201/128* (2013.01); *B65G 2814/0398* (2013.01)

(58) **Field of Classification Search**
CPC B65G 67/04; B64C 2201/128; B64C 2201/20; B64C 2201/201
See application file for complete search history.

(56) **References Cited**

U.S. PATENT DOCUMENTS

9,384,668	B2 *	7/2016	Raptopoulos	G08G 5/0069
9,387,928	B1	7/2016	Gentry et al.	
9,777,502	B2 *	10/2017	Curlander	E04H 14/00
9,840,340	B2 *	12/2017	O'Toole; Dan	B64F 1/32
2014/0254896	A1	9/2014	Zhou et al.	
2015/0006005	A1	1/2015	Yu et al.	
2015/0120094	A1	4/2015	Kimchi et al.	
2015/0175276	A1 *	6/2015	Koster	B64F 1/32 244/114 R
2015/0183528	A1 *	7/2015	Walsh	B64F 1/32 701/3
2015/0332206	A1	11/2015	Trew et al.	
2016/0159496	A1 *	6/2016	O'Toole	B64F 1/32 244/110 E
2016/0207627	A1	7/2016	Hoareau et al.	
2016/0209839	A1	7/2016	Hoareau et al.	

(Continued)

FOREIGN PATENT DOCUMENTS

WO	WO2016/037219	*	3/2016	B64D 1/02

OTHER PUBLICATIONS

Amazon Prime Air. Accessed Jan. 26, 2017, 9 pages. https://www.amazon.com/Amazon-Prime-Air/b?ie=UTF-8&node=8037720011.

(Continued)

Primary Examiner — Mark C Hageman
(74) *Attorney, Agent, or Firm* — Smith, Gambrell & Russell, LLP

(57) **ABSTRACT**

A transfer station includes a housing defining an inner space, and having a front passage for passage of a UGV and a top passage for passage of a container. One or more funnels are provided at the top passage for guiding the passage of containers therethrough, and an actuator system is provided for, selectively, engaging a container with a UAV suspension system and disengaging a container from a UAV suspension system. Also provided is a transfer system that is inclusive of the transfer station, a UAV, a UGV, and a reusable container; and methods of transferring reusable containers between UAVs and UGVs.
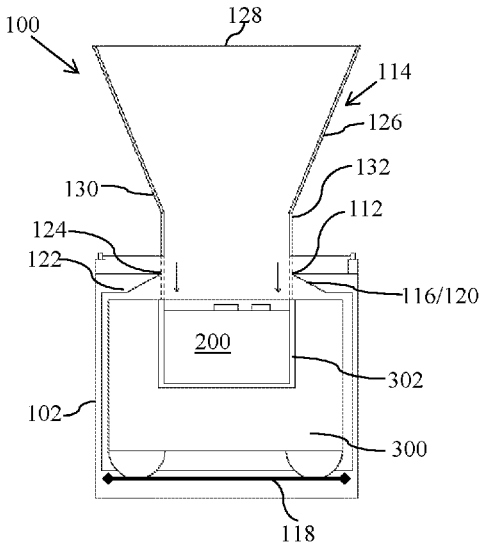
18 Claims, 9 Drawing Sheets