Jan. 20, 1970 J. H. MYER 3,490,950

SELECTIVE CONVERSION OF SOLAR ENERGY WITH RADIATION RESISTANT SOLAR ENERGY CONVERTER ARRAY

Filed May 26, 1964 2 Sheets-Sheet 1

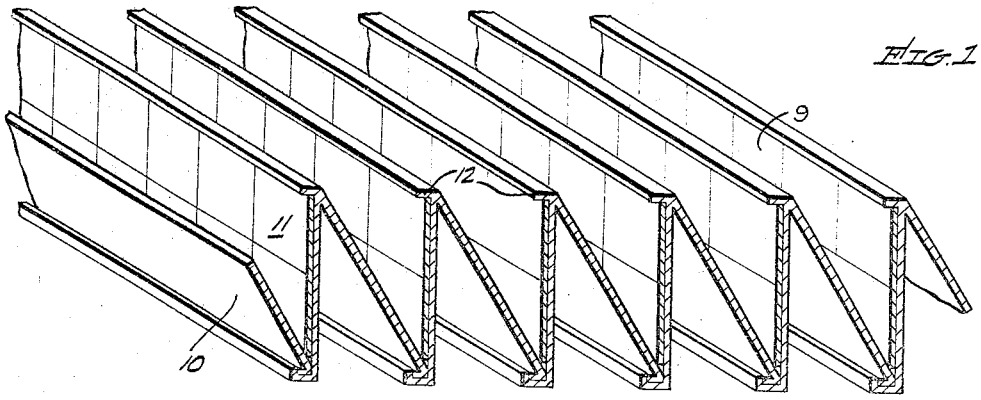

FIG. 1.

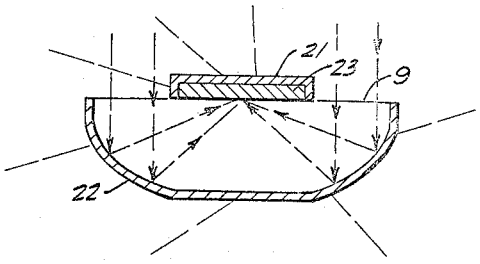

FIG. 3.

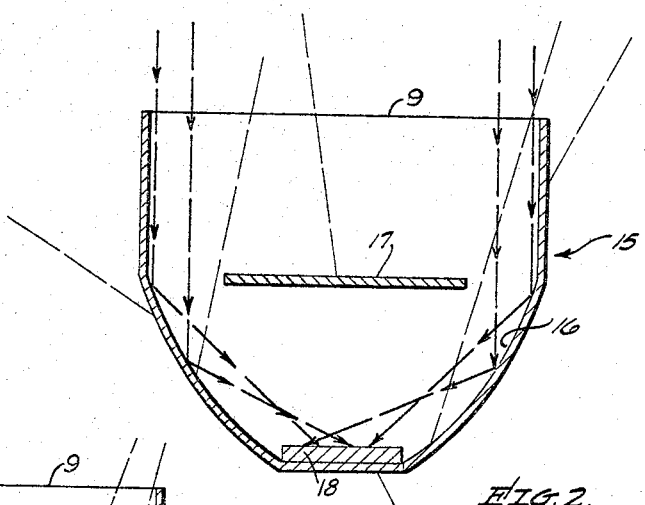

FIG. 2.

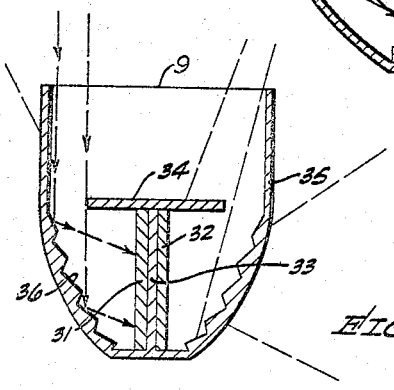

FIG. 5.

INVENTOR.
JON H. MYER,
BY
Charles S. Haughey
ATTORNEY.