(No Model.) 3 Sheets—Sheet 1.

G. EASTMAN.

CAMERA.

No. 388,850. Patented Sept. 4, 1888.

Fig. 1.

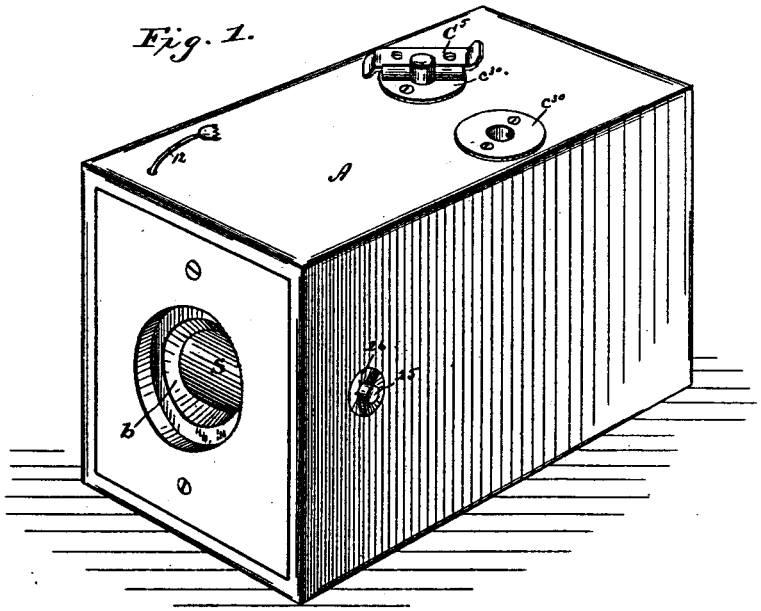

Fig. 3.

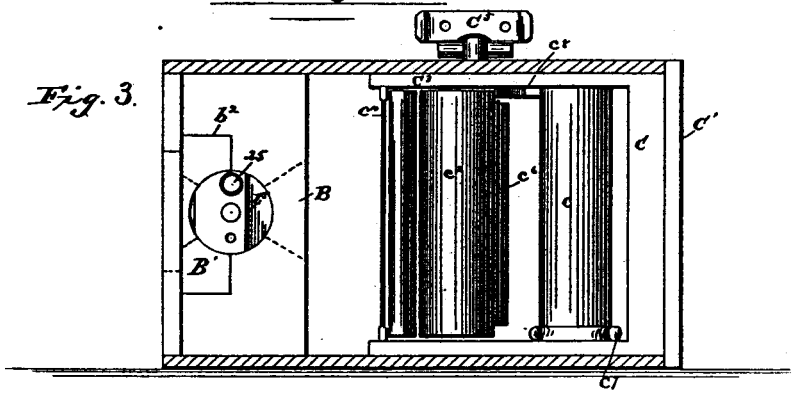

Fig. 2.

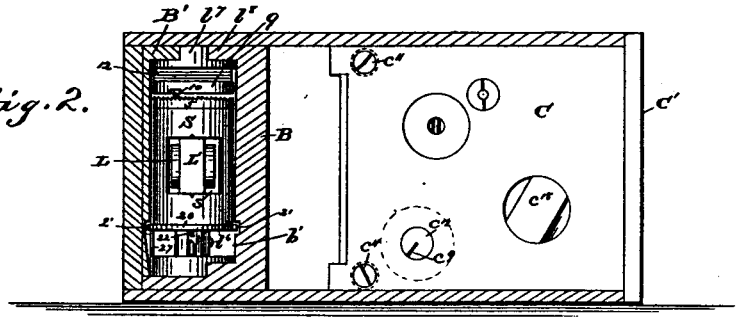

Witnesses.
Chas. R. Burr.
A. J. Stewart.

Inventor.
George Eastman.
by Church & Church
his Attorneys.

N. PETERS, Photo-Lithographer, Washington, D. C.