METHOD FOR MAKING ELASTIC BANDS

Filed July 18, 1952 3 Sheets-Sheet 2

FIG. 4

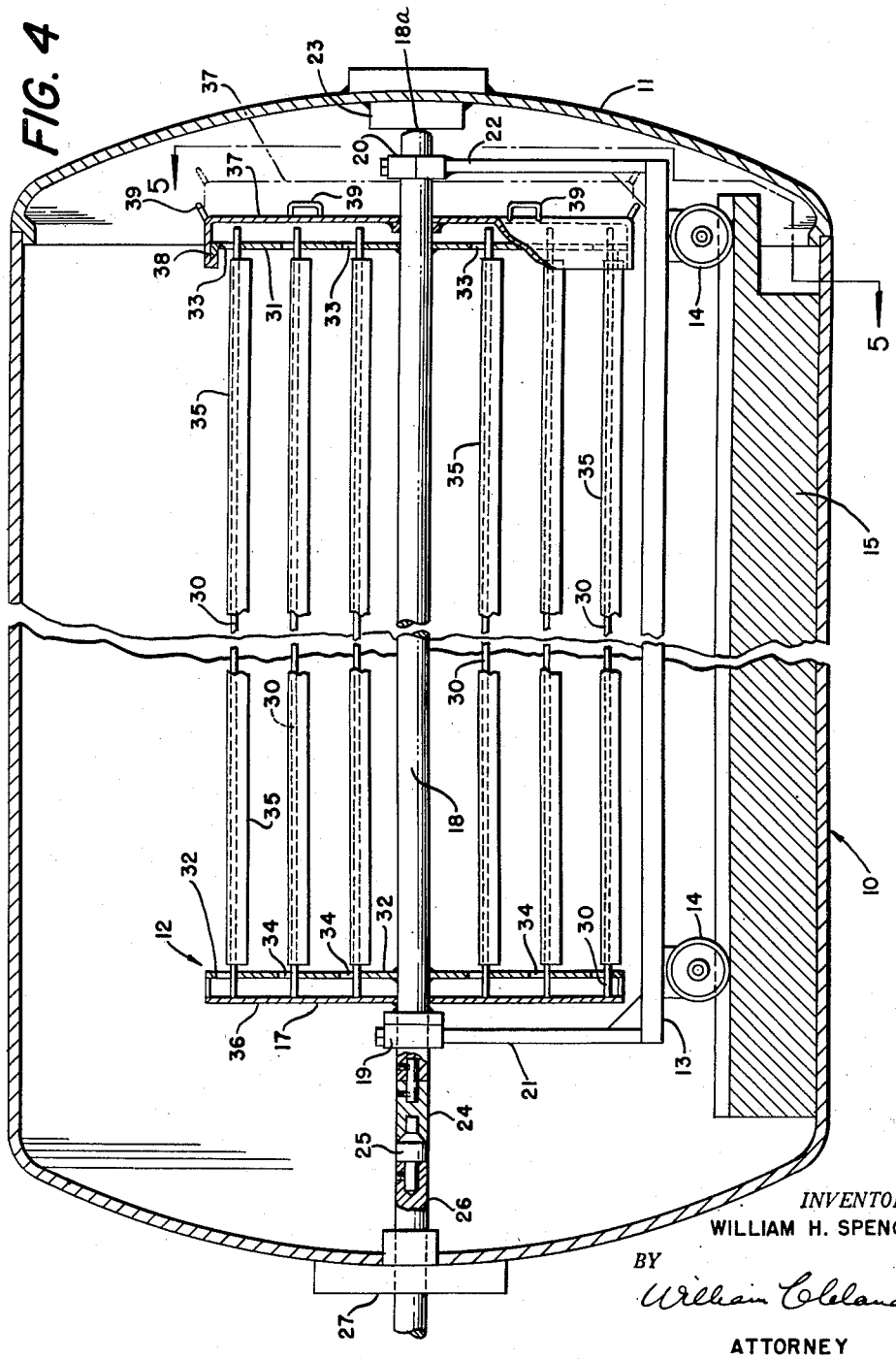

INVENTOR.
WILLIAM H. SPENCER
BY
William Cleland
ATTORNEY