METHOD FOR MAKING ELASTIC BANDS

Filed July 18, 1952 3 Sheets-Sheet 1

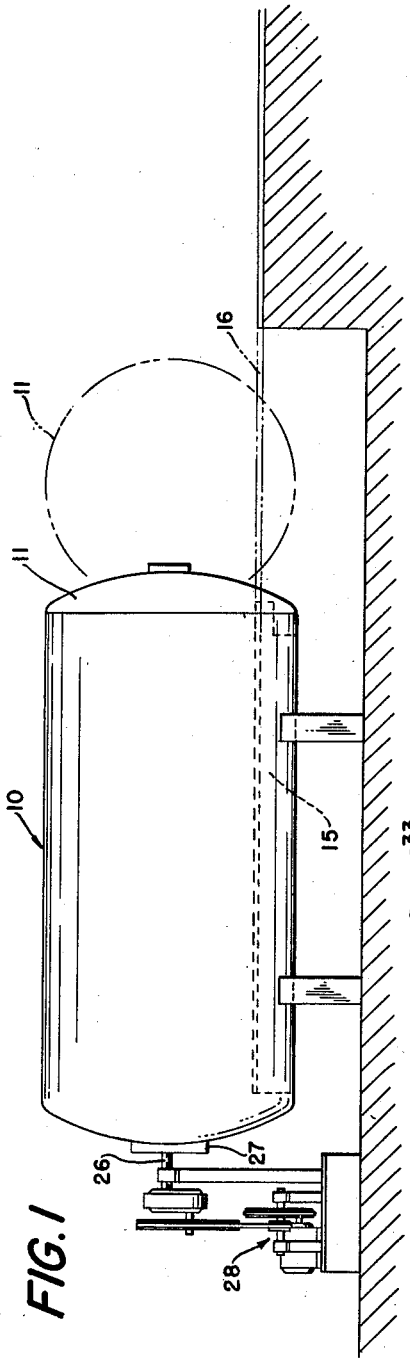

FIG. 1

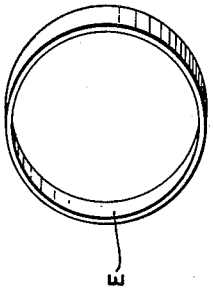

FIG. 3

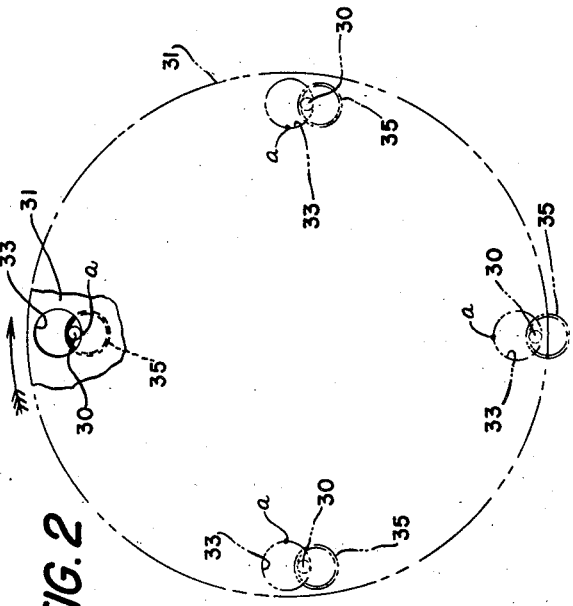

FIG. 2

INVENTOR.
WILLIAM H. SPENCER
BY
William Cleland
ATTORNEY