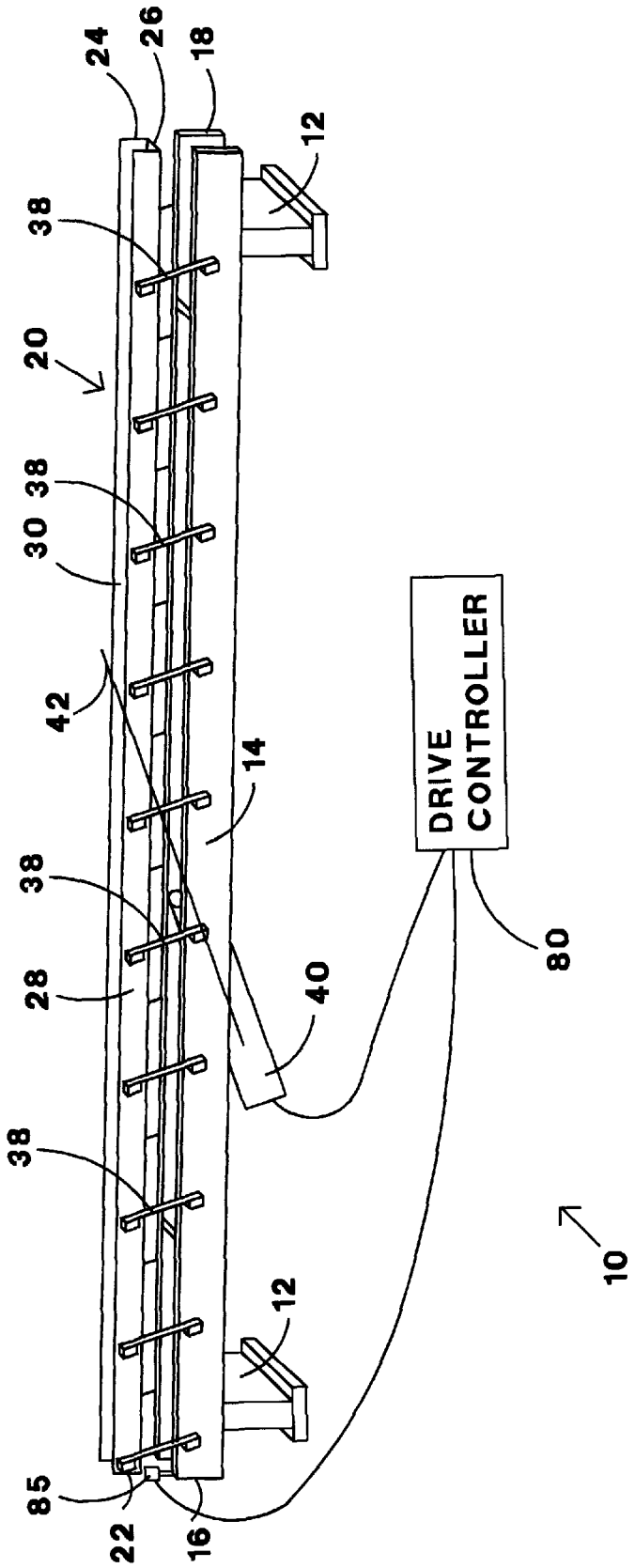
24
26
18
12
38
20
38
30
42
14
38
28
40
38
12
85
22
16
DRIVE CONTROLLER
80
10

FIG. 1