US005566650A

United States Patent [19]

Kruse

[11] **Patent Number: 5,566,650**

[45] **Date of Patent: Oct. 22, 1996**

[54] **INTERNAL COMBUSTION ENGINE WITH LIMITED TEMPERATURE CYCLE**

[76] Inventor: **Douglas C. Kruse**, 9440 Irondale Ave., Chatsworth, Calif. 91311

[21] Appl. No.: **466,817**

[22] Filed: **Jun. 6, 1995**

Related U.S. Application Data

[63] Continuation of Ser. No. 146,832, Oct. 29, 1993, Pat. No. 5,460,128, which is a continuation of Ser. No. 919,916, Jul. 27, 1992, Pat. No. 5,265,562.

[51] **Int. Cl.**[6] **F02B 1/14**; F02B 41/00; F02D 41/26

[52] **U.S. Cl.** ..... **123/27 R**; 123/299

[58] **Field of Search** ..... 123/299, 204, 123/300, 27 R, 27 GE, 27 A, 37, 543, 545, 526

[56] **References Cited**

U.S. PATENT DOCUMENTS

2,917,031	12/1959	Nestorovic	123/299
3,125,076	3/1964	Mullaney	123/27 R
4,070,998	1/1978	Grow	123/37
4,503,833	3/1985	Yunick	123/545
4,704,999	11/1987	Hashikawa et al.	123/299
4,798,184	1/1989	Palko	123/299
4,836,161	6/1989	Abthoff et al.	123/299
4,854,279	8/1989	Seno	123/204
4,858,579	8/1989	Elsbett et al.	123/299
4,862,859	9/1989	Yunick	123/545
4,913,113	4/1990	Baranescu	123/300
4,977,875	12/1990	Kumagai et al.	123/299
5,101,785	4/1992	Ito	123/299
5,265,562	11/1993	Kruse	123/27 R
5,460,128	10/1995	Kruse	123/27 R

FOREIGN PATENT DOCUMENTS

0492055	7/1992	European Pat. Off. .
2507142	9/1976	Germany .

Primary Examiner—Willis R. Wolfe
Attorney, Agent, or Firm—Robbins, Berliner & Carson

[57] **ABSTRACT**

An expandable chamber piston type internal combustion engine operating in an open thermodynamic cycle includes a combustion process having a constant volume (isochoric) phase followed by a constant temperature (isothermal) phase.
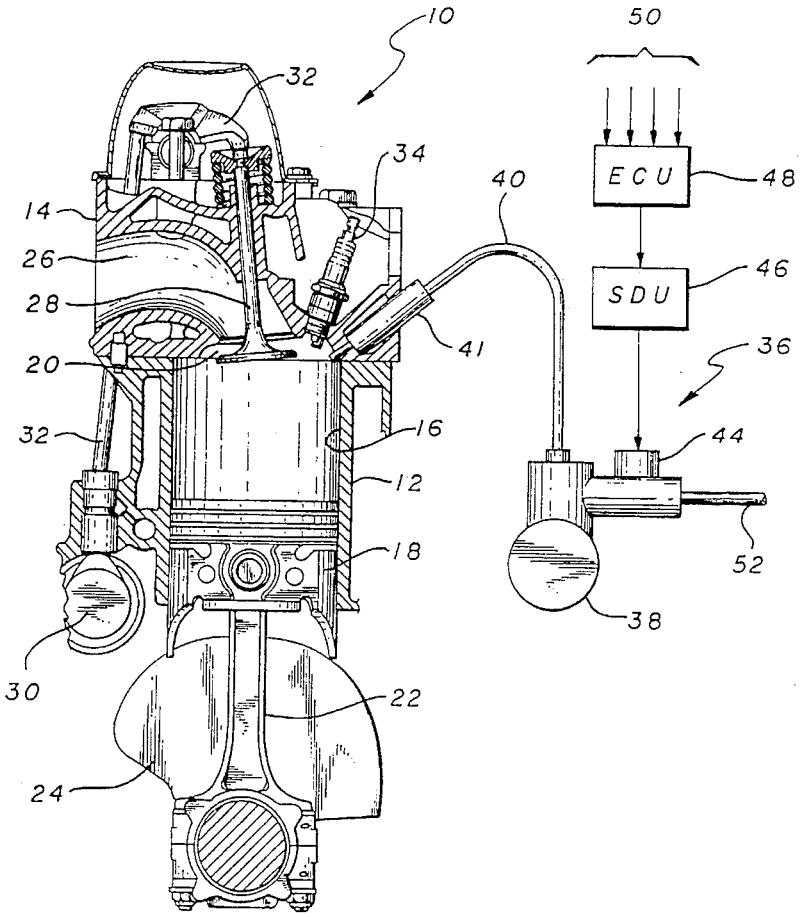
8 Claims, 8 Drawing Sheets