(No Model.)

M. E. BEASLEY.

PROCESS OF MAKING BARRELS.

No. 352,850. Patented Nov. 16, 1886.

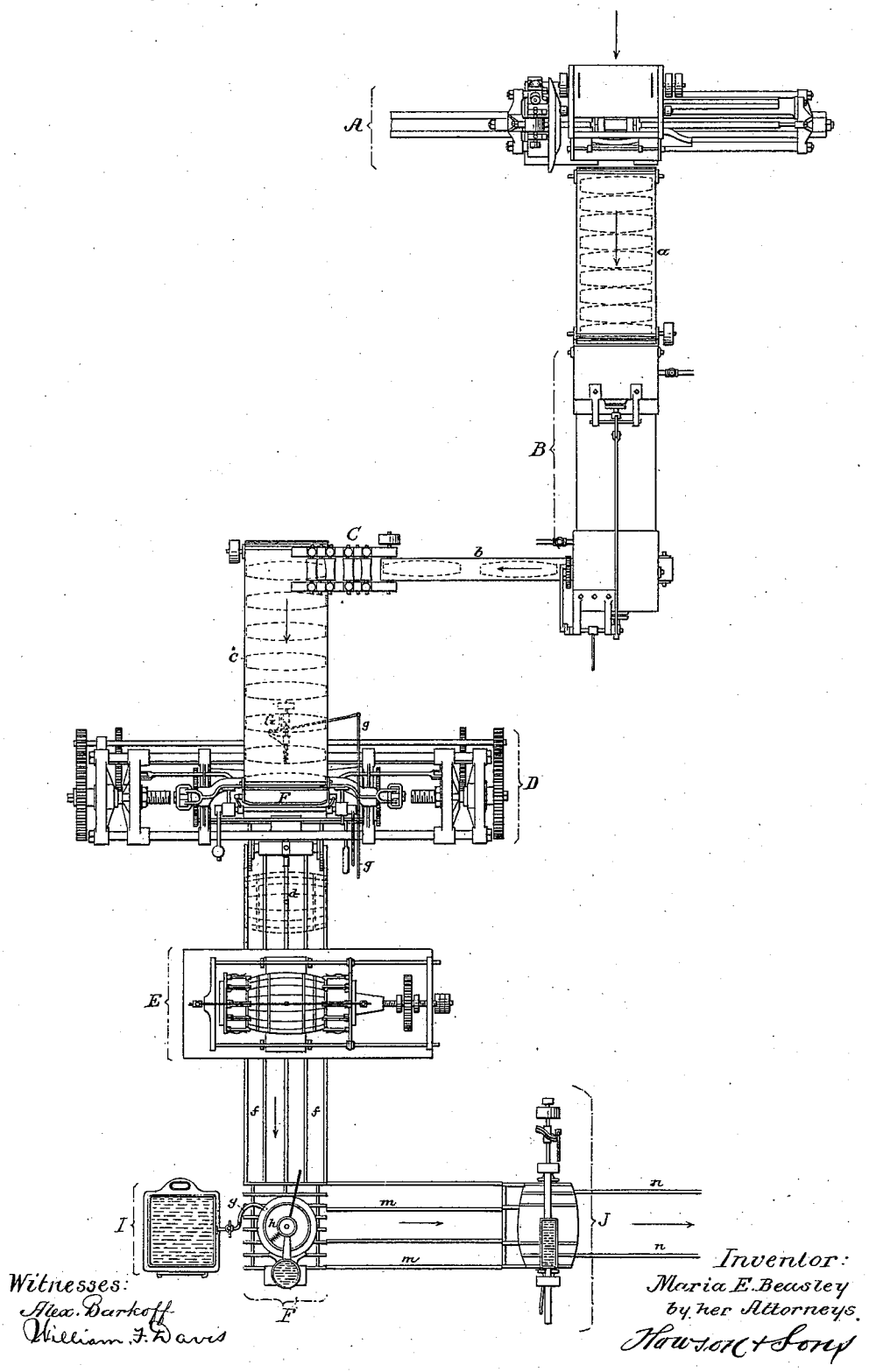

Witnesses:
Alex. Barkoff
William F. Davis

Inventor:
Maria E. Beasley
by her Attorneys.
Howson & Sons

N. PETERS, Photo-Lithographer, Washington, D. C.