Aug. 18, 1964 J. D. GYLFE 3,145,150

FUEL-MODERATOR ELEMENT FOR A NUCLEAR REACTOR AND METHOD OF MAKING

Filed Jan. 4, 1960

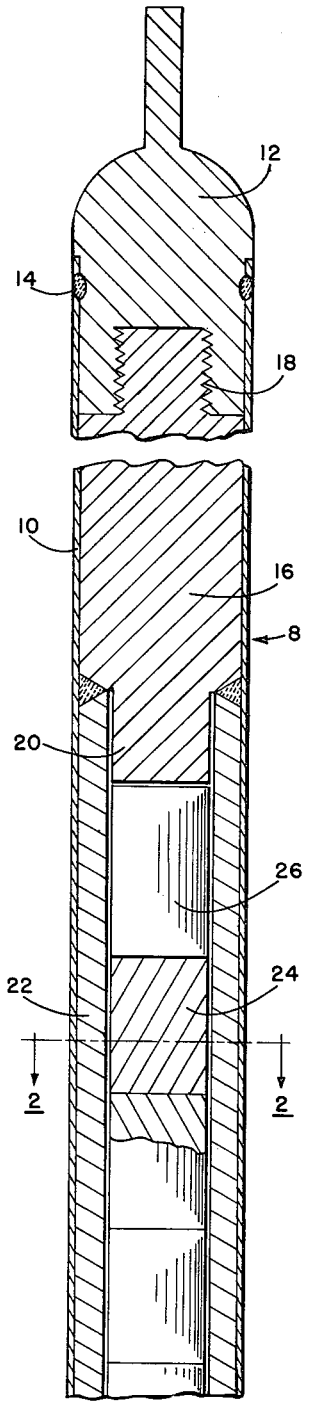

FIG. 1

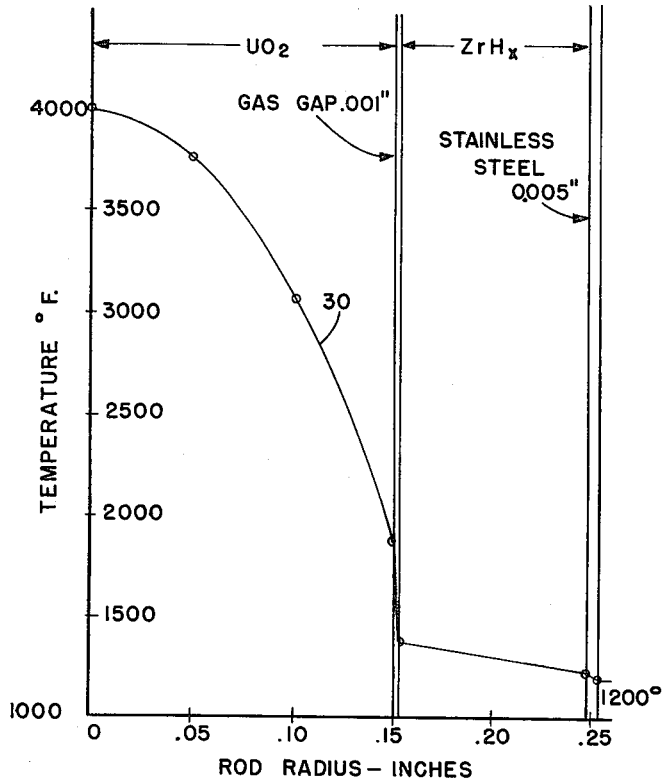

FIG. 3

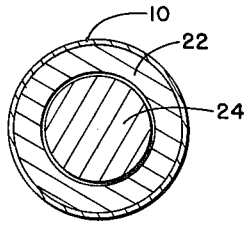

FIG. 2

INVENTOR.
JAMES D. GYLFE

BY

A. Frederick Hamann

ATTORNEY