(No Model.)

2 Sheets—Sheet 1.

M. E. BEASLEY.

BARREL HOOP DRIVING MACHINE.

No. 245,050. Patented Aug. 2, 1881.

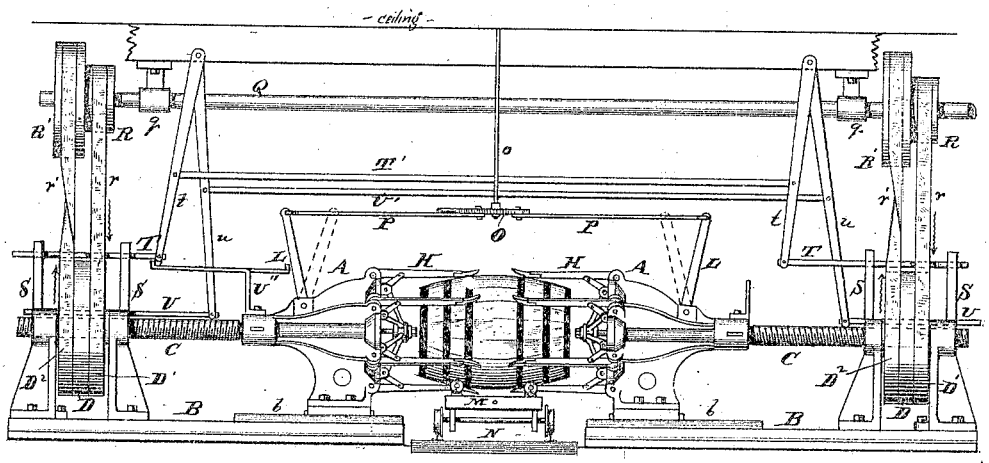

Fig. 1

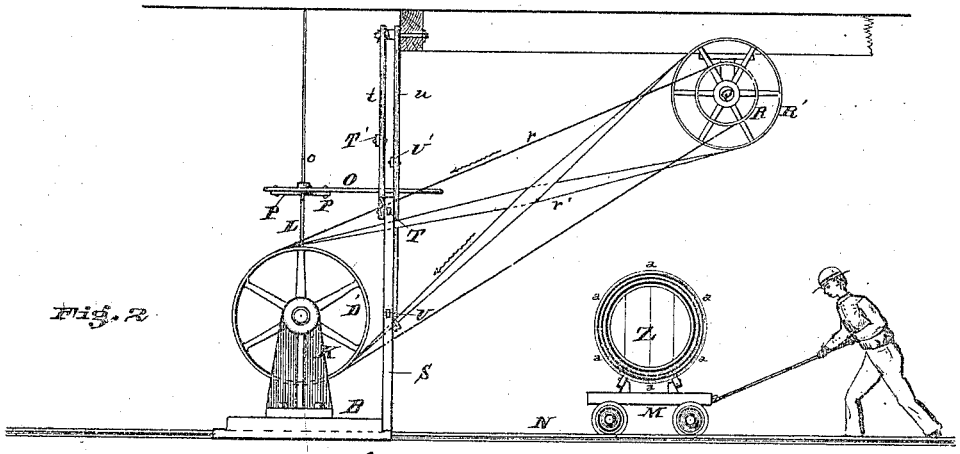

Fig. 2

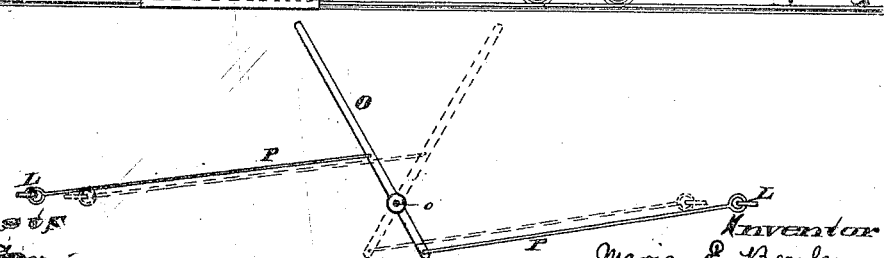

Fig. 3

Attest:

L. J. Mátos

Inventor

Maria E. Beasley

By her atty.