POINT-CONTACT SEMICONDUCTOR PHOTOCELL

Filed April 5, 1955 5 Sheets-Sheet 1

FIG. 1a.

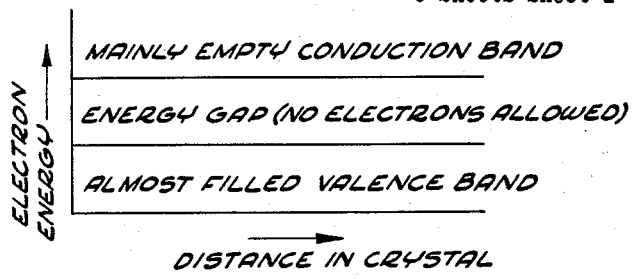

FIG. 1b.

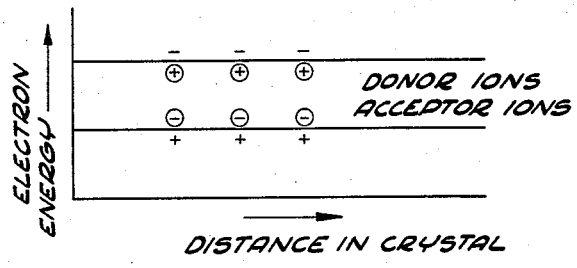

FIG. 1c.

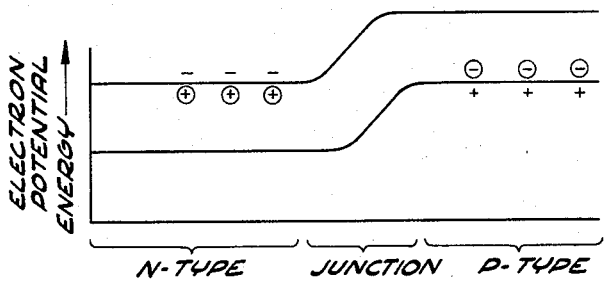

FIG. 2.

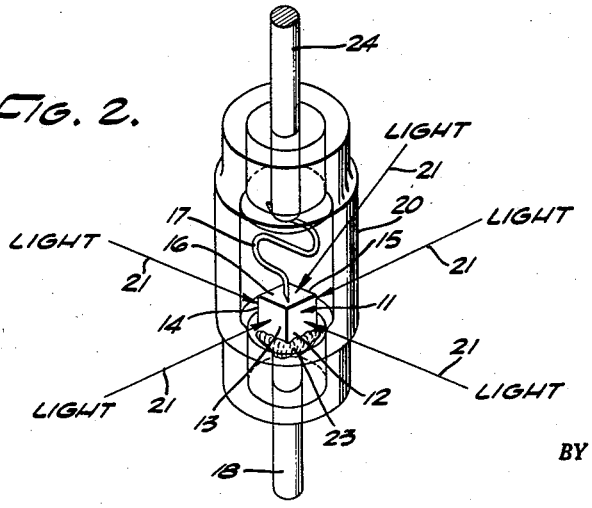

JON H. MYER
INVENTOR.

BY Henry Heymann

ATTORNEY