(No Model.)

3 Sheets—Sheet 1.

# G. EASTWOOD.

## STEREOTYPING.

No. 503,950.

Patented Aug. 29, 1893.

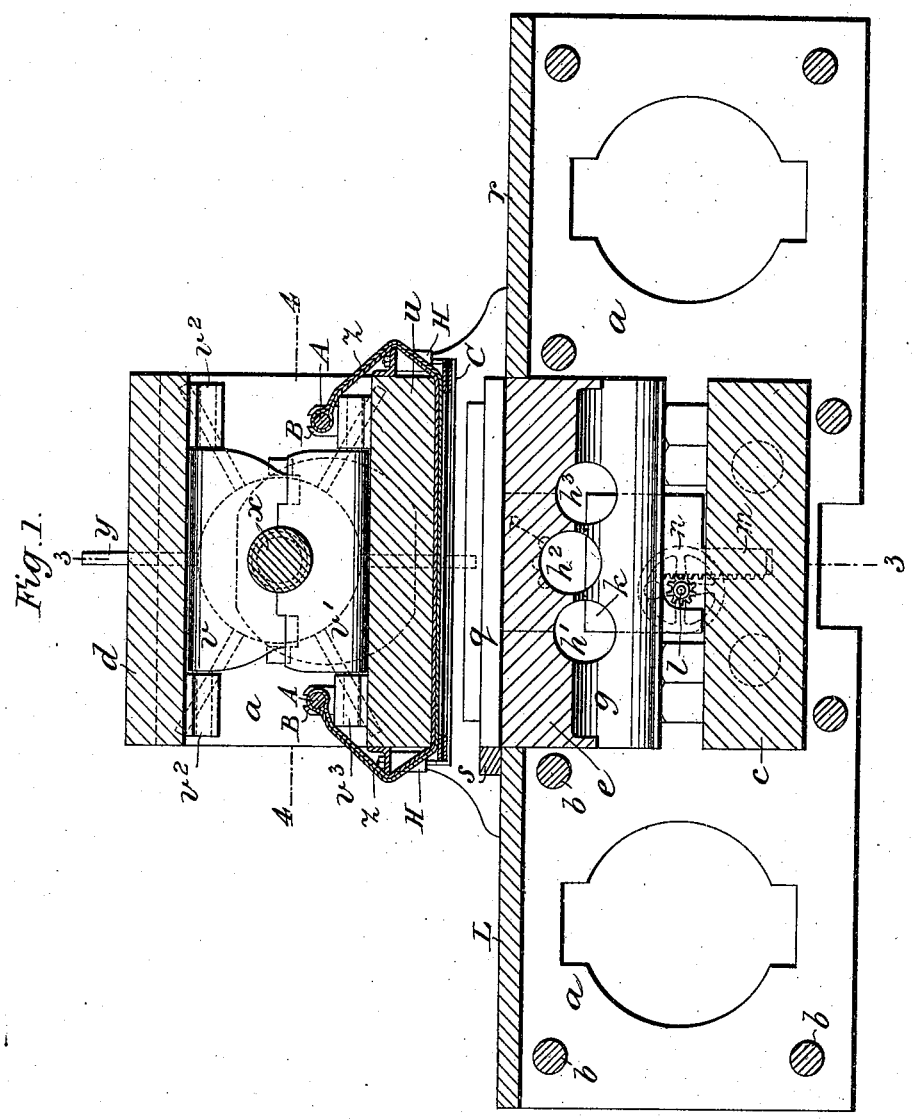


WITNESSES:

Fred White

C. K. Fraser.

INVENTOR:

George Eastwood,

By his Attorneys:

Arthur G. Fraser & Co.