US008391249B2

(12) **United States Patent**
Odenwalder et al.

(10) **Patent No.: US 8,391,249 B2**
(45) **Date of Patent: Mar. 5, 2013**

(54) **CODE DIVISION MULTIPLEXING COMMANDS ON A CODE DIVISION MULTIPLEXED CHANNEL**

(75) Inventors: **Joseph P. Odenwalder**, Rancho Santa Fe, CA (US); **Sandip Sarkar**, San Diego, CA (US)

(73) Assignee: **QUALCOMM Incorporated**, San Diego, CA (US)

(*) Notice: Subject to any disclaimer, the term of this patent is extended or adjusted under 35 U.S.C. 154(b) by 1319 days.

(21) Appl. No.: **10/611,333**

(22) Filed: **Jun. 30, 2003**

(65) **Prior Publication Data**

US 2004/0160933 A1 Aug. 19, 2004

Related U.S. Application Data

(60) Provisional application No. 60/448,269, filed on Feb. 18, 2003, provisional application No. 60/452,790, filed on Mar. 6, 2003, provisional application No. 60/470,225, filed on May 12, 2003, provisional application No. 60/470,770, filed on May 14, 2003.

(51) **Int. Cl.**
H04B 7/216 (2006.01)

(52) **U.S. Cl.** **370/335**; 370/342

(58) **Field of Classification Search** 370/335, 370/342, 465; 375/512, 149
See application file for complete search history.

(56) **References Cited**

U.S. PATENT DOCUMENTS

2,149,518	A	3/1939	Frank, Sr.
3,470,324	A	9/1969	Harmuth
4,768,023	A	8/1988	Xie
5,280,472	A	1/1994	Gilhousen et al.
5,394,433	A	2/1995	Bantz et al.
5,406,585	A	4/1995	Rohani et al.
5,463,342	A	10/1995	Guard et al.
5,483,557	A	1/1996	Webb et al.
5,490,165	A	2/1996	Blakeney, II et al.
5,535,214	A	7/1996	Shiobara
5,544,156	A	8/1996	Teder et al.
5,553,062	A	9/1996	Schilling et al.
5,581,575	A	12/1996	Zehavi et al.
5,592,470	A	1/1997	Rudrapatna et al.
5,627,938	A	5/1997	Johnston et al.
5,647,366	A	7/1997	Weng et al.
5,712,869	A	1/1998	Lee et al.
5,719,852	A	2/1998	Schilling et al.
5,726,978	A	3/1998	Frodigh et al.

(Continued)

FOREIGN PATENT DOCUMENTS

CN	1166094	11/1997
CN	1263675	8/2000

(Continued)

OTHER PUBLICATIONS

International Search Report—PCT/US04/04669, International Search Authority—European Patent Office—Jul. 27, 2004.

(Continued)

Primary Examiner — Chandrahas Patel
(74) *Attorney, Agent, or Firm* — Sayed H. Beladi; Won Tae Kim

(57) **ABSTRACT**

An apparatus includes a first encoder for receiving a plurality of symbol streams for respective ones of a plurality of mobile stations and encoding each of the symbol streams with one of a plurality of covering sequences to form a plurality of covered sequences. The apparatus further includes a summer for summing the plurality of covered sequences to form a first Code Division Multiplexed (CDM) signal. In addition, the apparatus includes a second encoder for covering the first CDM signal with a covering sequence to form a first covered CDM signal. A system and method for multiplexing plurality of symbol streams are also provided.
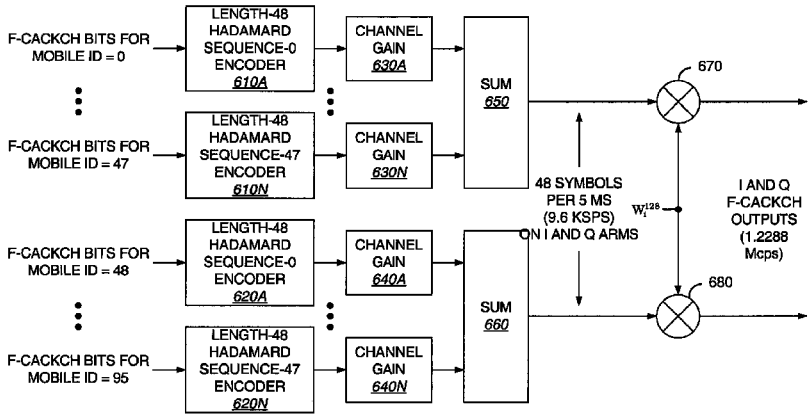
25 Claims, 9 Drawing Sheets