June 26, 1934. M. ADAMS ET AL 1,963,949

HIGH POWERED ILLUMINATING DEVICE

Filed Oct. 22, 1931 2 Sheets-Sheet 1

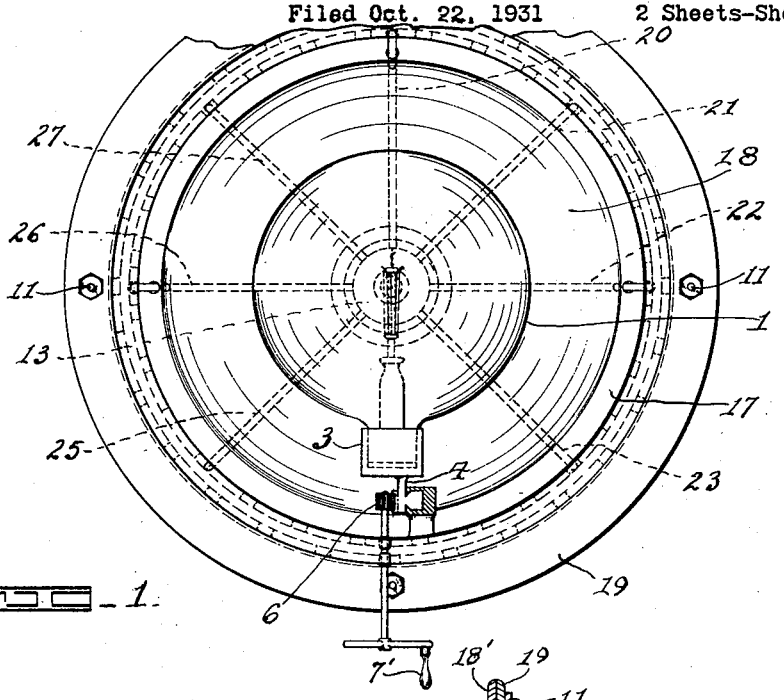

1

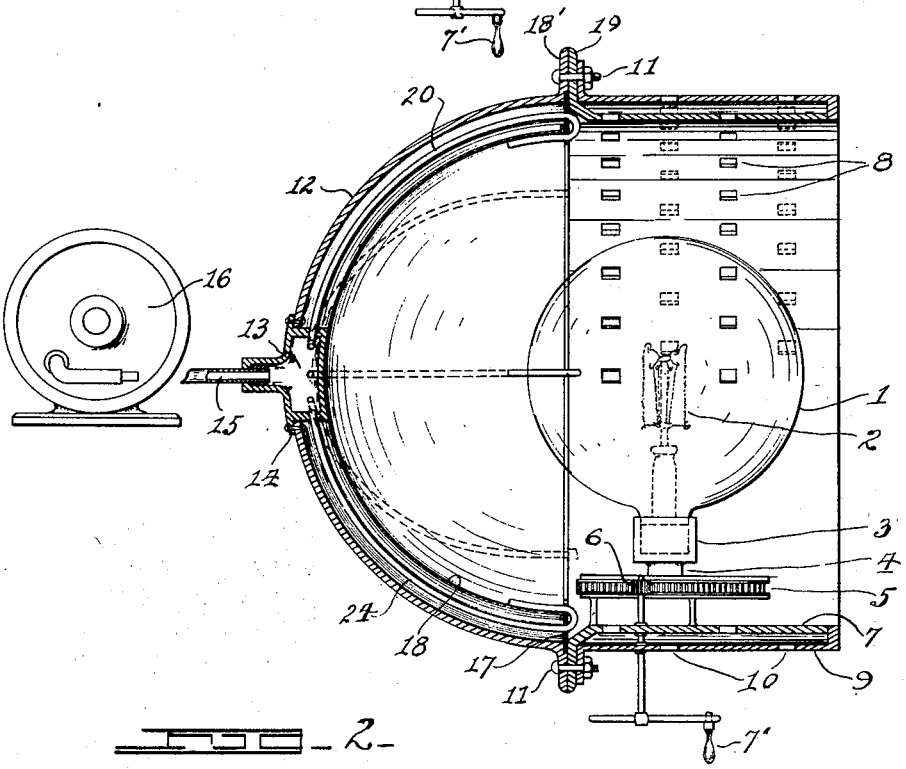

2

INVENTOR

Maude Adams and
Raymond F. Howe

BY their ATTORNEYS

Darby & Darby