US011054049B2

(12) **United States Patent**
Calmer et al.

(10) **Patent No.: US 11,054,049 B2**
(45) **Date of Patent: Jul. 6, 2021**

(54) **PRECISION FUEL METERING CHECK VALVE CARTRIDGE**

(71) Applicant: **Buescher Developments, LLC**, Cleveland, OH (US)

(72) Inventors: **Kevin S. Calmer**, Medina, OH (US); **Timothy P. Meyer**, Rocky River, OH (US); **Sree K. Menon**, Highland Heights, OH (US)

(73) Assignee: **BUESCHER DEVELOPMENTS, LLC**, Cleveland, OH (US)

(*) Notice: Subject to any disclaimer, the term of this patent is extended or adjusted under 35 U.S.C. 154(b) by 0 days.

(21) Appl. No.: **16/445,596**

(22) Filed: **Jun. 19, 2019**

(65) **Prior Publication Data**

US 2020/0400243 A1 Dec. 24, 2020

(51) **Int. Cl.**

F16K 17/30	(2006.01)
F02M 63/00	(2006.01)
F16K 15/02	(2006.01)
F16K 31/56	(2006.01)
F16K 15/04	(2006.01)
F16K 15/06	(2006.01)

(52) **U.S. Cl.**

CPC ***F16K 17/30*** (2013.01); ***F02M 63/0054*** (2013.01); ***F02M 63/0063*** (2013.01); ***F02M 63/0075*** (2013.01); ***F16K 15/021*** (2013.01); ***F16K 15/044*** (2013.01); ***F16K 31/566*** (2013.01); *F16K 15/063* (2013.01); *Y10T 137/7927* (2015.04)

(58) **Field of Classification Search**

CPC F16K 17/30; F16K 17/0406; F16K 15/044; F16K 15/021; F16K 31/566; F16K 15/063; F02M 63/0054; F02M 63/0063; F02M 63/0075; Y10T 137/7927

See application file for complete search history.

(56) **References Cited**

U.S. PATENT DOCUMENTS

110,082	A	*	12/1870	Snyder	A62C 4/02 48/192
4,365,648	A	*	12/1982	Grothe	F16K 15/044 137/539
4,396,035	A	*	8/1983	Maples	F16K 15/044 137/539
4,675,003	A	*	6/1987	Hooven	A61M 27/006 137/539
5,183,075	A	*	2/1993	Stein	F02M 59/462 137/493.6
6,116,273	A		9/2000	Tarr et al.	

(Continued)

Primary Examiner — Jessica Cahill
Assistant Examiner — Patrick C Williams
(74) *Attorney, Agent, or Firm* — Tarolli, Sundheim, Covell & Tummino LLP

(57) **ABSTRACT**

A check and flow metering cartridge valve having two flow restriction zones, each zone being disposed adjacent a respective end of a valve chamber containing a check valve member, the zones being serially encountered by flow through the valve, the restriction of the restriction zones together being a majority of the total flow restriction in the valve, each restriction zone producing at least 26% of a total restriction to flow through the valve, the restriction zones maintaining back pressure in the valve chamber when the check valve member is unseated thereby providing damping of the check valve member.
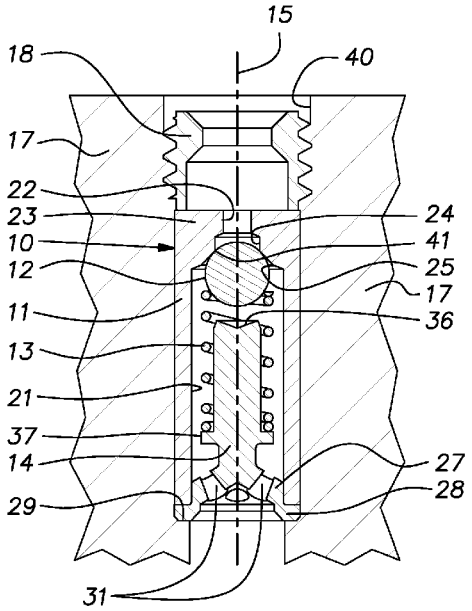
11 Claims, 2 Drawing Sheets