BEST AVAILABLE COPY

(No Model.) 2 Sheets—Sheet 1.

W. H. WALKER & G. EASTMAN.

ROLLER HOLDER FOR PHOTOGRAPHIC FILMS.

No. 317,049. Patented May 5, 1885.

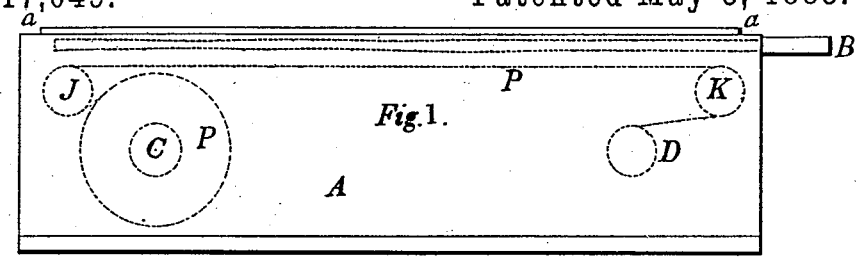

Fig. 1.

Fig. 2.

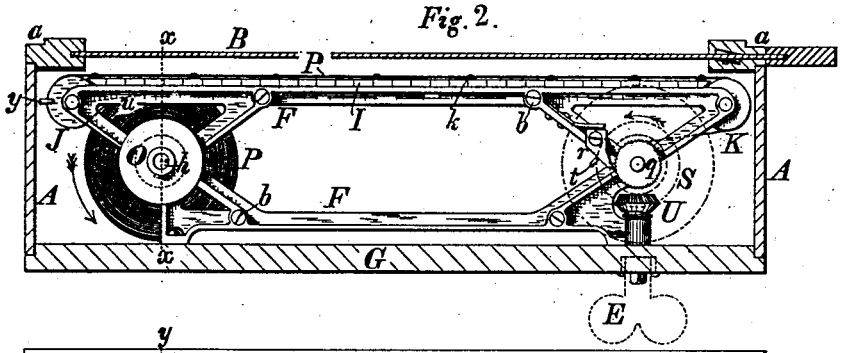

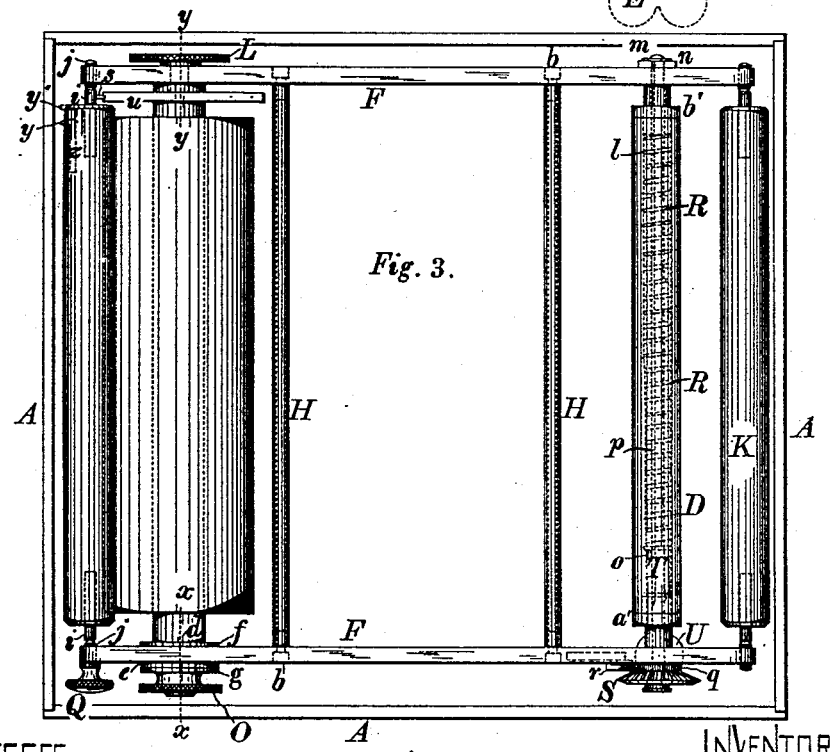

Fig. 3.

WITNESSES-
H. G. Phillips.
Geo E. Sherry

INVENTORS-
Wm. H. Walker, and
George Eastman
by Geo. B. Selden,
atty.

N. PETERS, Photo-Lithographer, Washington, D. C.