US007797448B1

(12) **United States Patent**
Szoke

(10) **Patent No.: US 7,797,448 B1**
(45) **Date of Patent: Sep. 14, 2010**

(54) **GPS-INTERNET LINKAGE**

(76) Inventor: **Ernest G Szoke**, 6 Mercergate Dr., Doylestown, PA (US) 18901

(*) Notice: Subject to any disclaimer, the term of this patent is extended or adjusted under 35 U.S.C. 154(b) by 1226 days.

(21) Appl. No.: **09/699,192**

(22) Filed: **Oct. 28, 2000**

Related U.S. Application Data

(60) Provisional application No. 60/162,169, filed on Oct. 28, 1999.

(51) **Int. Cl.**
G06F 15/16 (2006.01)

(52) **U.S. Cl.** **709/245**; 709/202; 709/205; 709/217; 709/227; 709/237; 709/249; 701/207; 701/208; 701/209; 701/213; 701/214; 701/216

(58) **Field of Classification Search** 709/205, 709/217, 249, 245, 202, 225, 228, 237; 455/428, 455/456, 457, 456.1; 701/207, 208, 209, 701/213, 214, 216
See application file for complete search history.

(56) **References Cited**

U.S. PATENT DOCUMENTS

5,602,903 A * 2/1997 LeBlanc et al. 455/456.2
5,636,122 A * 6/1997 Shah et al. 701/207
5,652,717 A * 7/1997 Miller et al. 703/6
5,940,739 A * 8/1999 Conrad et al. 455/13.1
5,946,618 A * 8/1999 Agre et al. 455/428
6,104,815 A * 8/2000 Alcorn et al. 380/251
6,128,501 A * 10/2000 Ffoulkes-Jones 455/456.3
6,148,211 A * 11/2000 Reed et al. 455/456.2
6,169,902 B1 * 1/2001 Kawamoto 455/456.4
6,199,099 B1 * 3/2001 Gershman et al. 709/203
6,208,857 B1 * 3/2001 Agre et al. 455/428
6,236,365 B1 * 5/2001 LeBlanc et al. 342/457
6,243,039 B1 * 6/2001 Elliot 342/457
6,292,747 B1 * 9/2001 Amro et al. 701/213
6,327,535 B1 * 12/2001 Evans et al. 701/300
6,343,317 B1 * 1/2002 Glorikian 709/218
6,351,221 B1 * 2/2002 Phillips et al. 340/825.49
6,529,136 B2 * 3/2003 Cao et al. 340/686.1
6,553,236 B1 * 4/2003 Dunko et al. 455/456.1
6,677,858 B1 * 1/2004 Faris et al. 340/573.1
6,912,398 B1 * 6/2005 Domnitz 455/461
7,143,130 B2 * 11/2006 Lin 709/203
7,606,938 B2 * 10/2009 Roese et al. 709/242
2003/0097408 A1 * 5/2003 Kageyama et al. 709/205
2004/0236501 A1 * 11/2004 Hirose et al. 701/200

OTHER PUBLICATIONS

MSN Search Result for Global Positioning System.

* cited by examiner

Primary Examiner—Michael Won
(74) *Attorney, Agent, or Firm*—Henry E. Millson, Jr.

(57) **ABSTRACT**

An integrated system comprising the Global Positioning System and the Internet wherein the integrated system can identify the precise geographical location of both sender and receiver communicating computer terminals.
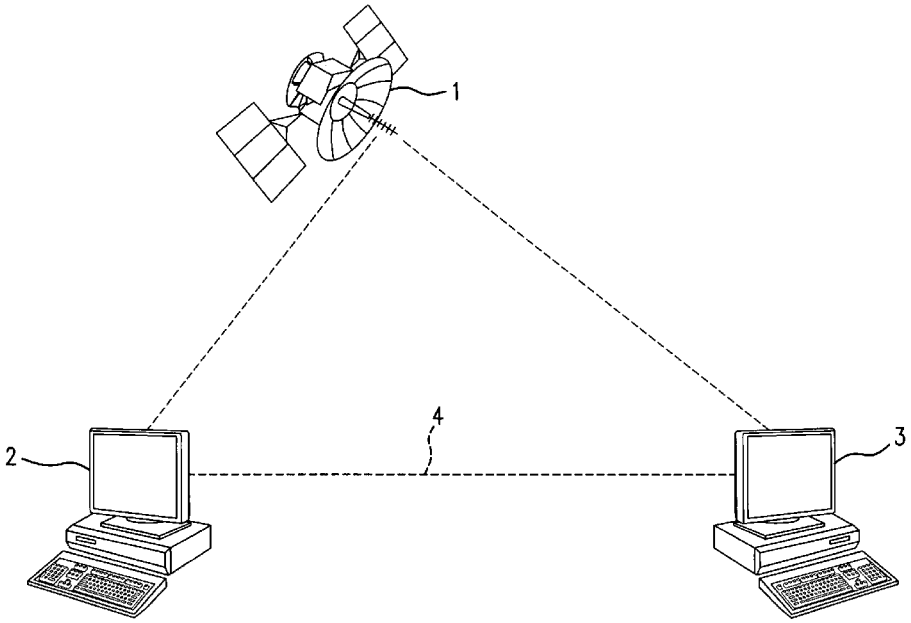
13 Claims, 1 Drawing Sheet