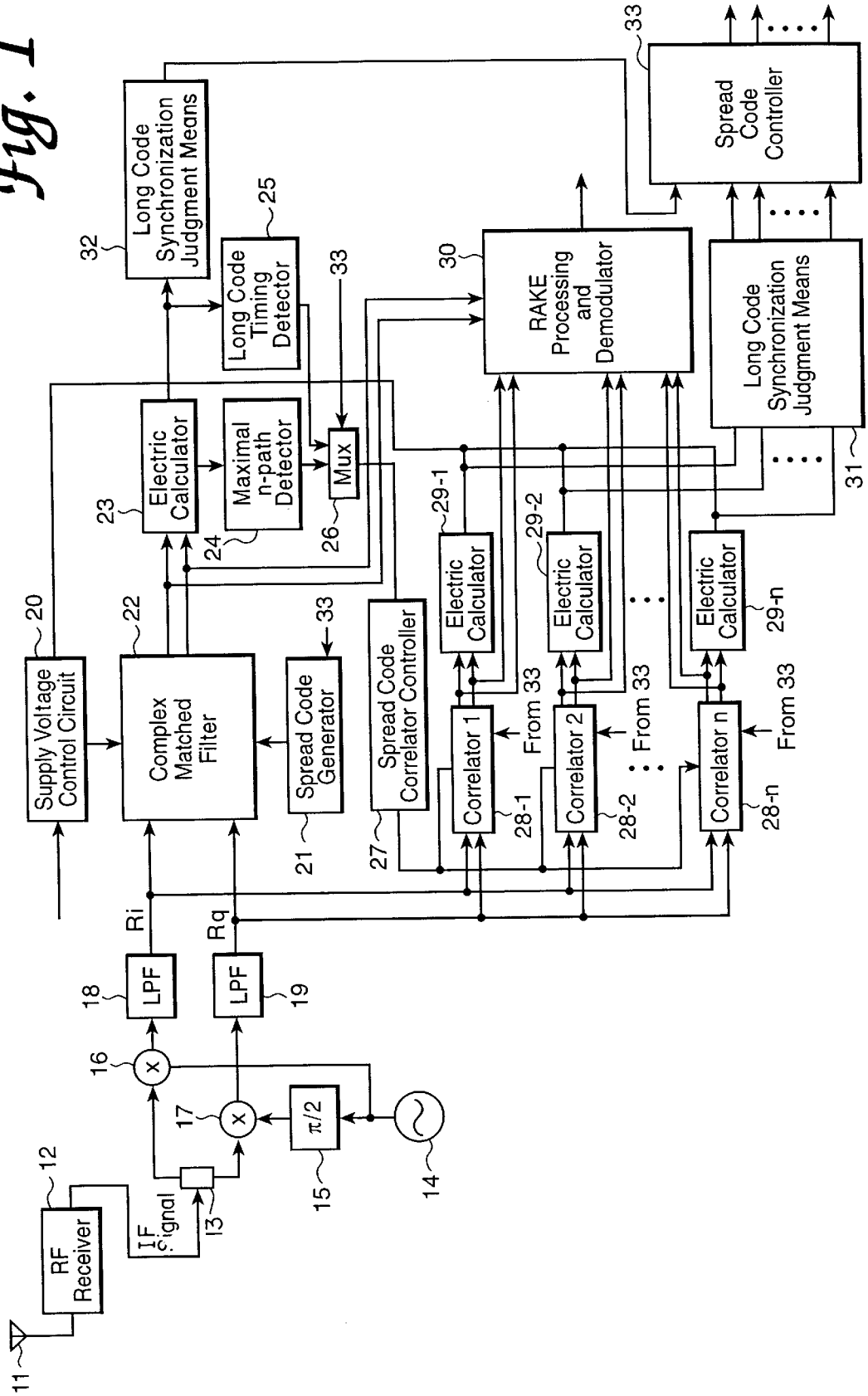
Fig. 1
RF Receiver
IF Signal
LPF
LPF
Ri
Rq
π/2
Supply Voltage Control Circuit
Complex Matched Filter
Spread Code Generator
Spread Code Correlator Controller
Electric Calculator
Maximal n-path Detector
Mux
Long Code Timing Detector
Long Code Synchronization Judgment Means
RAKE Processing and Demodulator
Correlator 1
Correlator 2
Correlator n
From 33
Spread Code Controller
11
12
13
14
15
16
17
18
19
20
21
22
23
24
25
26
27
28-1
28-2
28-n
29-1
29-2
29-n
30
31
32
33