(No Model.) 2 Sheets—Sheet 1.

K. DOUGAN.

MECHANICAL BALLOT AND BALLOT HOLDER.

No. 440,547. Patented Nov. 11, 1890.

Fig. 1.

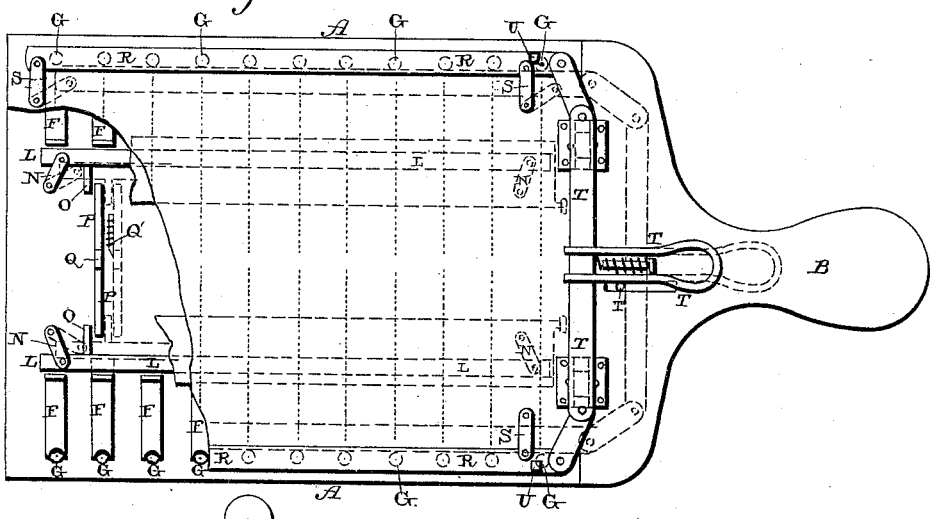

Fig. 2.

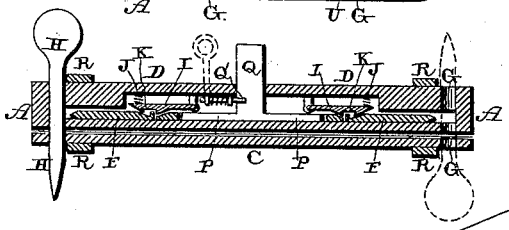

Fig. 4.

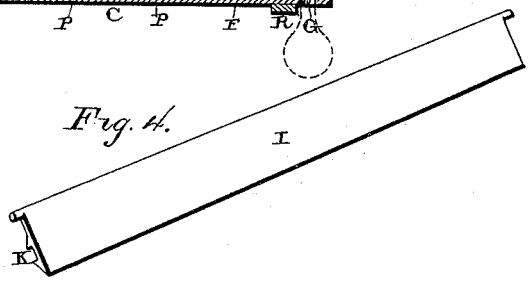

Fig. 3.

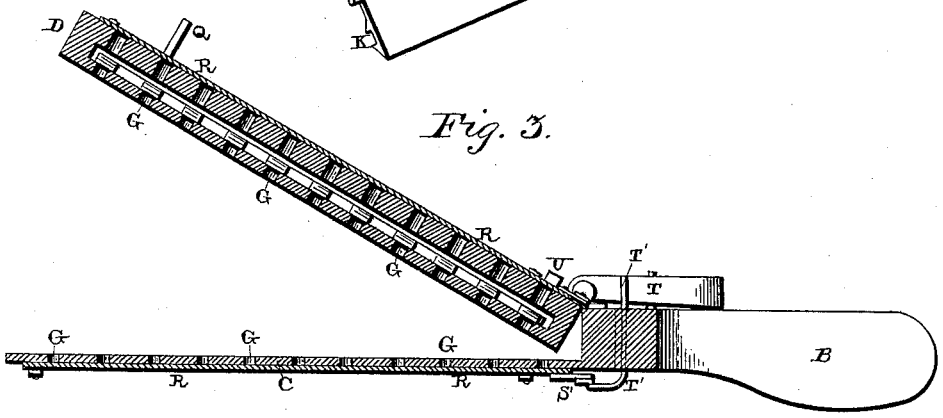

Witnesses:
E. P. Ellis,
B. Brockett,

Inventor:
Kennedy Dougan,
per F. A. Lehmann, Atty.

THE NORRIS PETERS CO., PHOTO-LITHO., WASHINGTON, D. C.