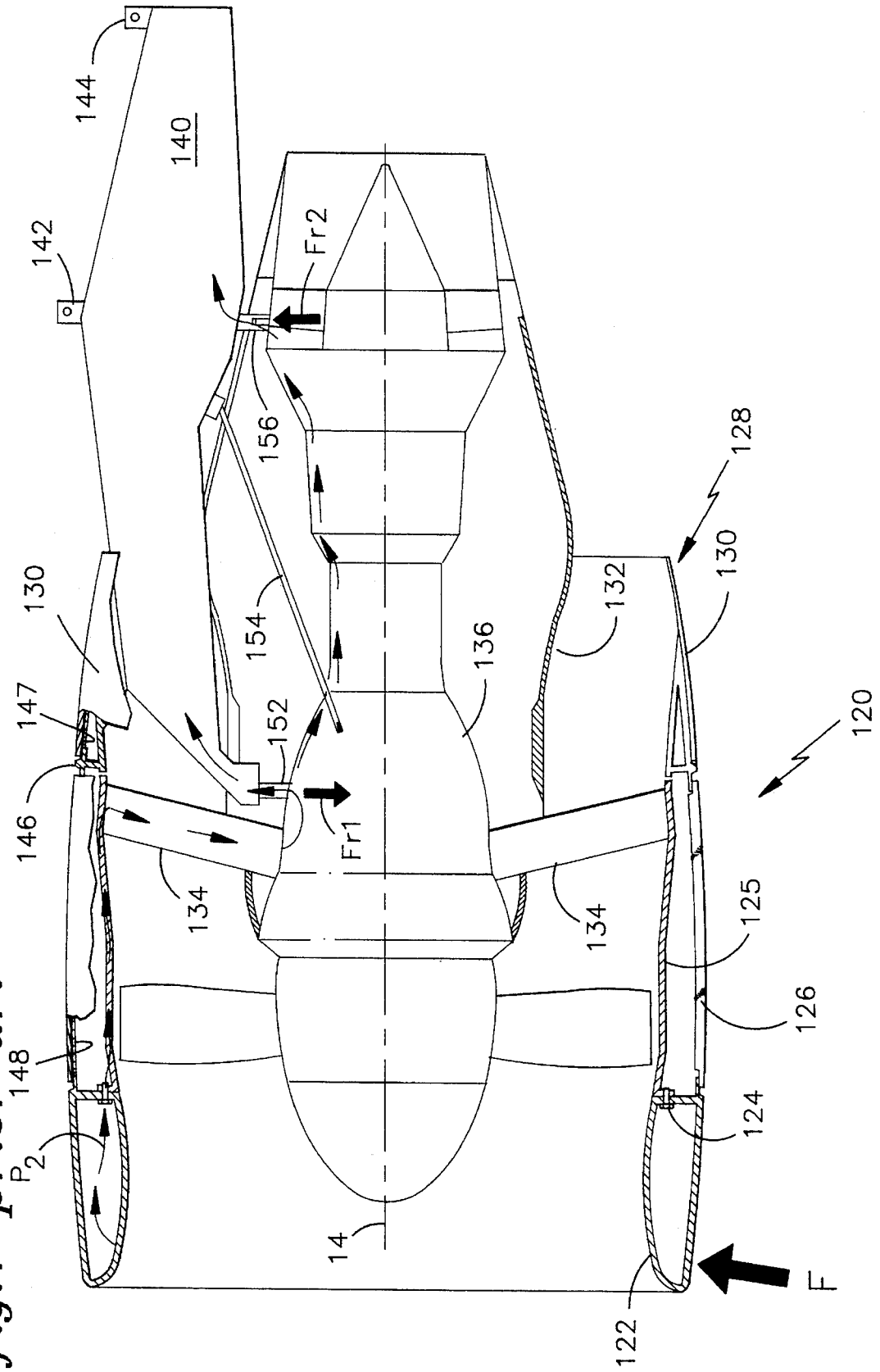

fig. 7 prior art