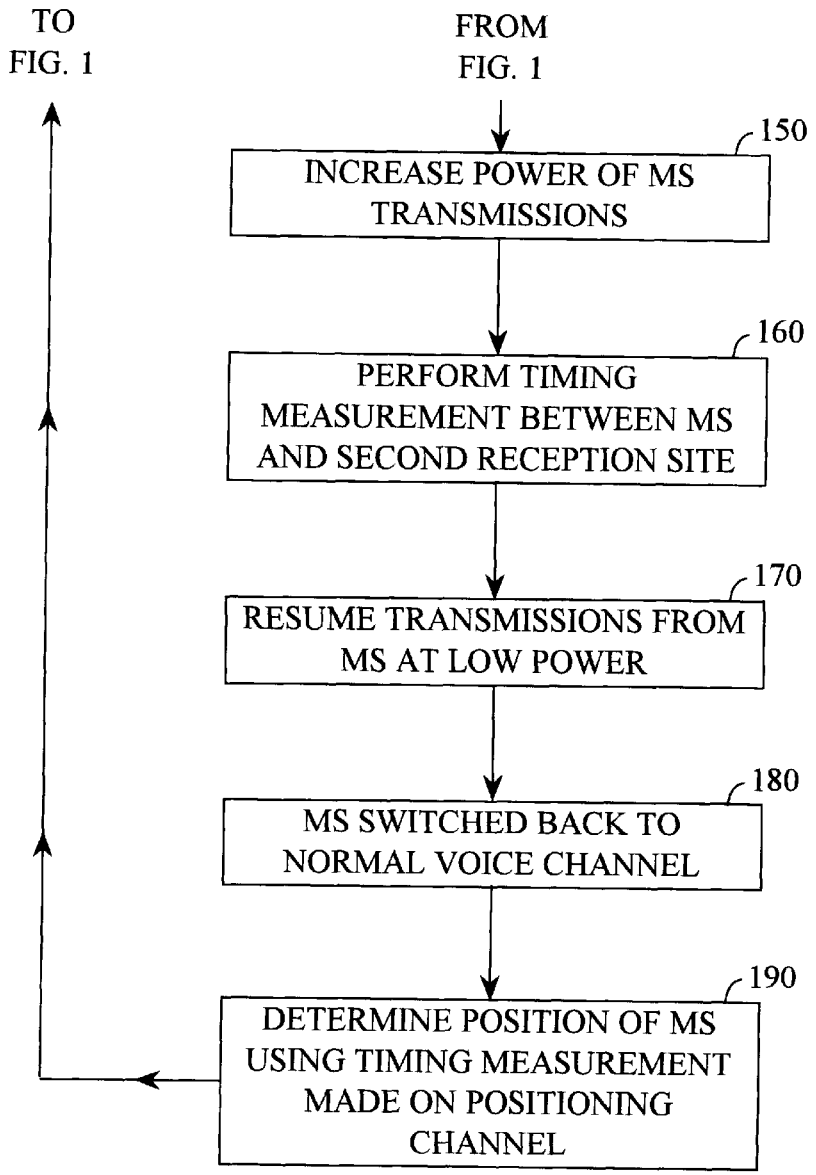
TO
FIG. 1
FROM
FIG. 1
150
INCREASE POWER OF MS TRANSMISSIONS
160
PERFORM TIMING MEASUREMENT BETWEEN MS AND SECOND RECEPTION SITE
170
RESUME TRANSMISSIONS FROM MS AT LOW POWER
180
MS SWITCHED BACK TO NORMAL VOICE CHANNEL
190
DETERMINE POSITION OF MS USING TIMING MEASUREMENT MADE ON POSITIONING CHANNEL

FIG. 1A