US009784546B2

(12) **United States Patent**
Burdine et al.

(10) **Patent No.: US 9,784,546 B2**
(45) **Date of Patent: Oct. 10, 2017**

(54) **AREA DENIAL SYSTEM**

(71) Applicants: **Robert Van Burdine**, Ardmore, TN (US); **Dorothy Devine Burdine**, Ardmore, TN (US)

(72) Inventors: **Robert Van Burdine**, Ardmore, TN (US); **Dorothy Devine Burdine**, Ardmore, TN (US)

(*) Notice: Subject to any disclaimer, the term of this patent is extended or adjusted under 35 U.S.C. 154(b) by 0 days.

(21) Appl. No.: **14/587,171**

(22) Filed: **Dec. 31, 2014**

(65) **Prior Publication Data**

US 2016/0187114 A1 Jun. 30, 2016

(51) **Int. Cl.**
F42B 23/00 (2006.01)

(52) **U.S. Cl.**
CPC ***F42B 23/005*** (2013.01)

(58) **Field of Classification Search**
CPC F42B 23/005; A01M 23/36
USPC 102/401–429
See application file for complete search history.

(56) **References Cited**

U.S. PATENT DOCUMENTS

765,818	A *	7/1904	Crago	A01M 23/36 124/37
3,033,113	A *	5/1962	Lowe	F42C 15/42 102/409
8,689,695	B2 *	4/2014	Burdine	F42B 23/04 102/401
9,032,805	B2 *	5/2015	Wakeman	G01L 19/10 116/273
2013/0220160	A1 *	8/2013	Burdine	F42B 6/003 102/439

* cited by examiner

Primary Examiner — Stephen Johnson
Assistant Examiner — Joshua T Semick

(57) **ABSTRACT**

A propelled lance provides a wounding non-lethal anti-opponent action by piercing an enemy's foot or other contacting body part with a lance penetrator. The lance penetrator lodges in the body and further penetration is optionally impeded by an integrated stop device. The lance penetrator optionally inserts an RFID, other identification, tracking, or other payload into the enemy. The lance penetrator provides anti-personnel, anti-vehicle and anti-robot action.
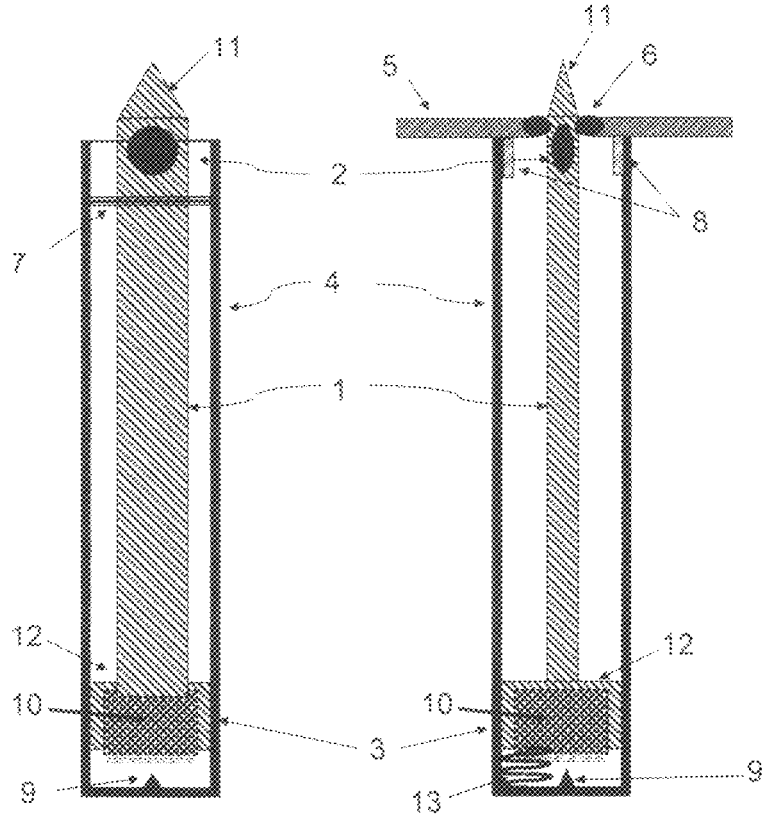
2 Claims, 12 Drawing Sheets