J. A. WILLIAMS.

METHOD OF PRODUCING SOLID BODIES FROM POWDER OR OTHER LOOSE MATERIAL.

APPLICATION FILED JULY 14, 1915.

1,174,646. Patented Mar. 7, 1916.

Fig. 1.

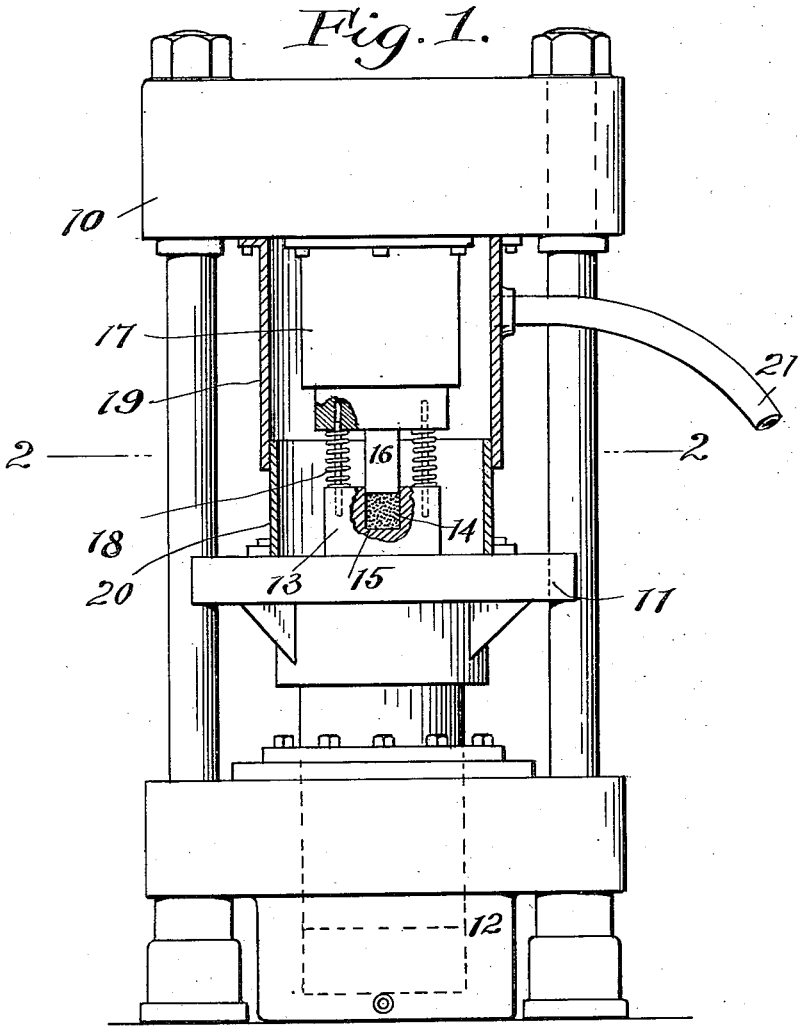

Fig. 2.

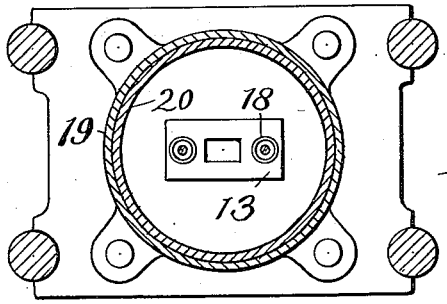

Inventor:
Joseph A. Williams
by Thurston & Spring
atty