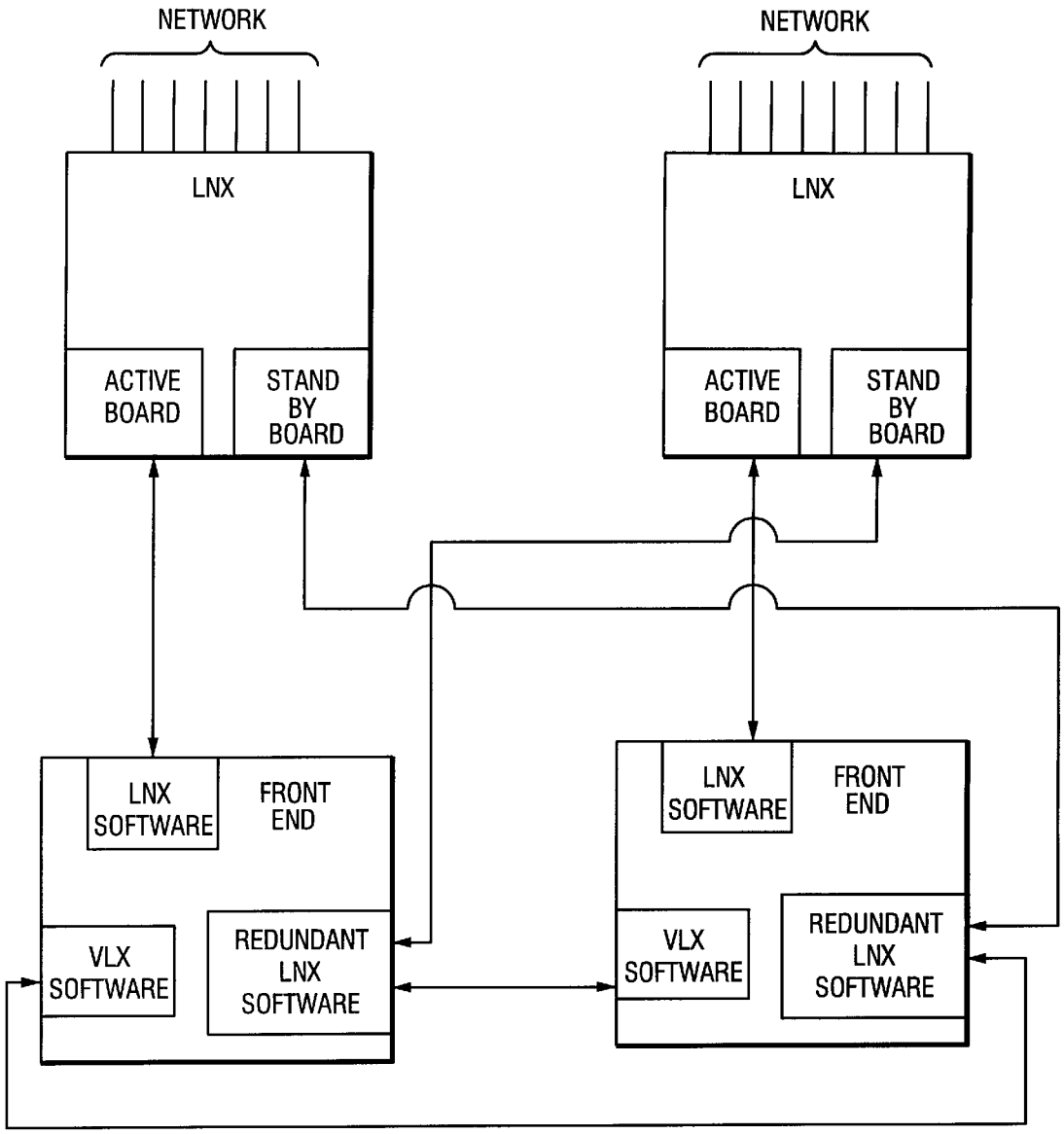
NETWORK
NETWORK
LNX
LNX
ACTIVE BOARD
STAND BY BOARD
ACTIVE BOARD
STAND BY BOARD
LNX SOFTWARE
FRONT END
VLX SOFTWARE
REDUNDANT LNX SOFTWARE
LNX SOFTWARE
FRONT END
VLX SOFTWARE
REDUNDANT LNX SOFTWARE

Fig. 14