US006195345B1

(12) **United States Patent**
Kramer

(10) **Patent No.: US 6,195,345 B1**
(45) **Date of Patent: Feb. 27, 2001**

(54) **HIGH CAPACITY MULTIMEDIA MESSAGING EXCHANGES**

(75) Inventor: **Philip Kramer**, Karlskrona (SE)

(73) Assignee: **Ericsson Messaging Systems, Inc.**, Woodbury, NY (US)

(*) Notice: Subject to any disclaimer, the term of this patent is extended or adjusted under 35 U.S.C. 154(b) by 0 days.

(21) Appl. No.: **09/001,414**

(22) Filed: **Dec. 3, 1997**

(51) **Int. Cl.**[7] **H04L 12/66**

(52) **U.S. Cl.** **370/352**; 379/220

(58) **Field of Search** 370/400, 352, 370/270, 254; 379/219, 220, 226, 227, 88.17, 93.01; 709/219, 238, 240, 241; 348/6, 12; 455/6.1, 5.1

(56) **References Cited**

U.S. PATENT DOCUMENTS

4,723,238		2/1988	Isreal et al. .
5,193,110		3/1993	Jones et al. .
5,325,423		6/1994	Lewis .
5,333,266		7/1994	Boaz et al. .
5,365,524		11/1994	Hiller et al. .
5,371,852		12/1994	Attanasio et al. .
5,497,373	*	3/1996	Hulen et al. 710/1
5,524,137		6/1996	Rhee .
5,528,281		6/1996	Grady et al. .
5,577,105		11/1996	Baum et al. .
5,761,500	*	6/1998	Gallant et al. 707/10
5,892,968	*	4/1999	Iwasaki et al. 710/1
5,905,879	*	5/1999	Lambrecht 710/117
6,038,296	*	3/2000	Brunson et al. 379/100.11

OTHER PUBLICATIONS

"Ericsson's MXE—Multimedia Messaging for PCS," Ericsson Messaging Systems, Inc., 1995 (Various Brochures).

* cited by examiner

Primary Examiner—Chi H. Pham
Assistant Examiner—Brenda H. Pham
(74) *Attorney, Agent, or Firm*—Nixon & Vanderhye P.C.

(57) **ABSTRACT**

A multimedia messaging system for use in providing voice mail, fax mail, e-mail, notification services, etc. over telephony lines is disclosed in which the system is adaptable for clustering to a single telephony-equipped switch. Multiple back-end systems can be added to the single telephony equipped switch such that the back-end machines operate the same as they would in stand-alone mode, thus making the cluster transparent to the back-end machines.
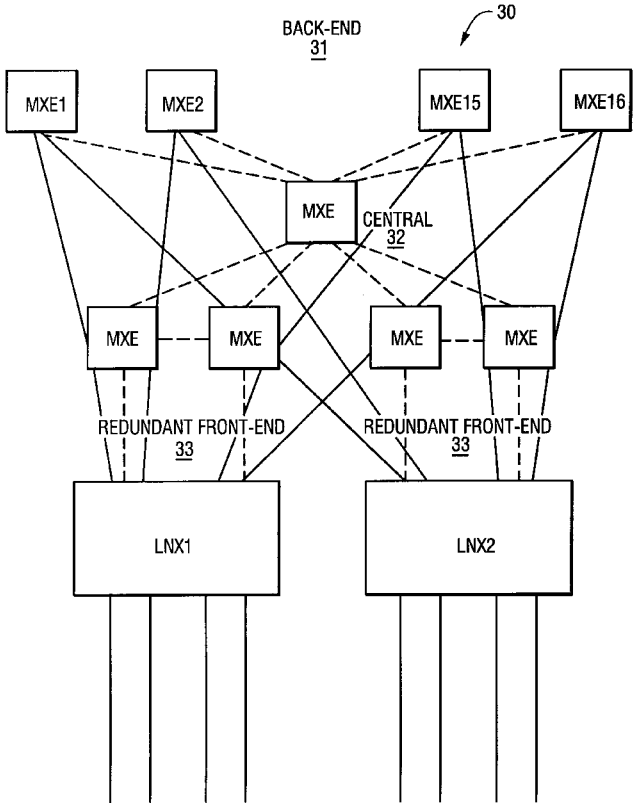
30 Claims, 14 Drawing Sheets