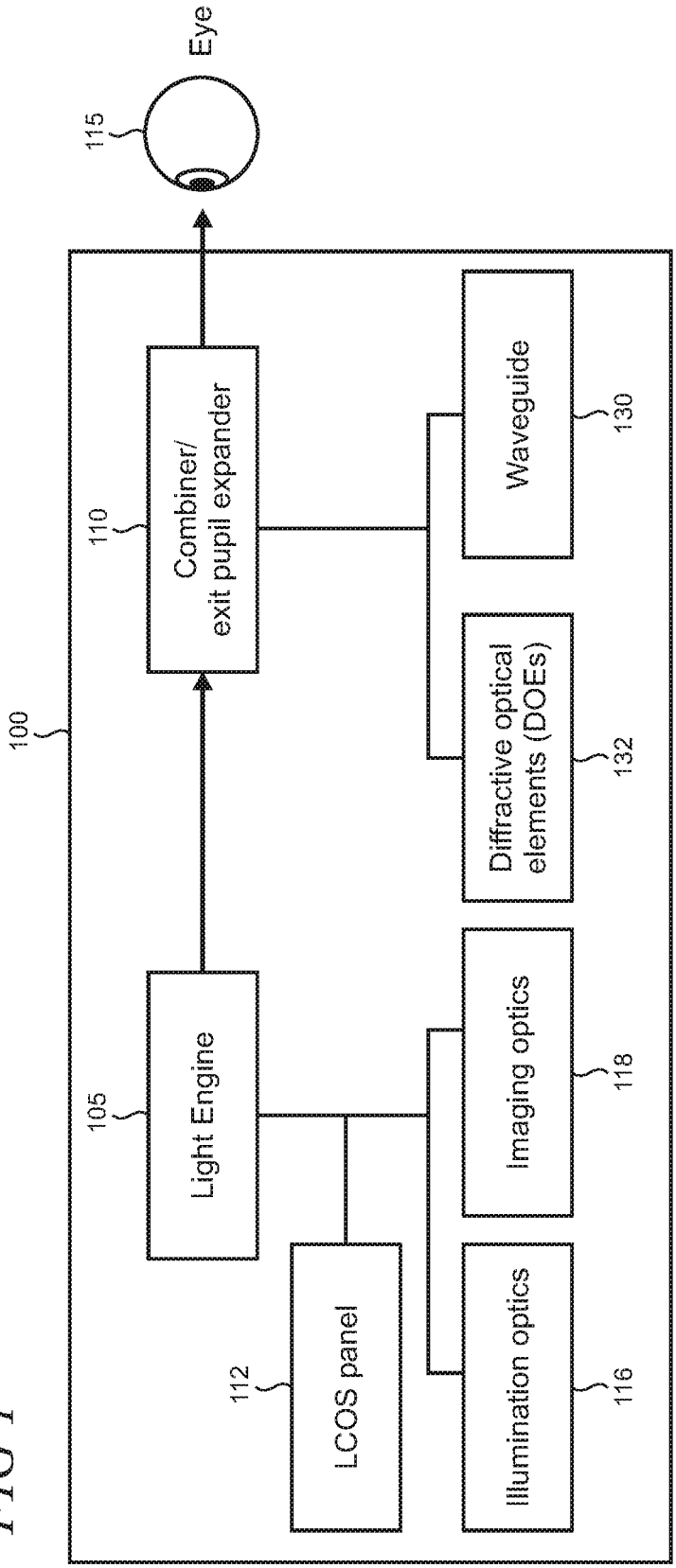
100
105
Light Engine
110
Combiner/
exit pupil expander
112
LCOS panel
115
Eye
116
Illumination optics
118
Imaging optics
130
Waveguide
132
Diffractive optical
elements (DOEs)

FIG 1

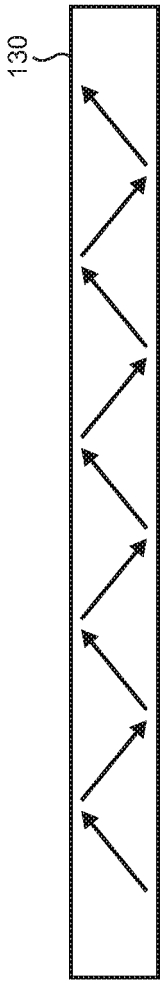
130

FIG 2