July 4, 1933. H. FERGUSON 1,916,945

TRACTOR DRAWN AGRICULTURAL IMPLEMENT

Filed June 6, 1929 2 Sheets-Sheet 1

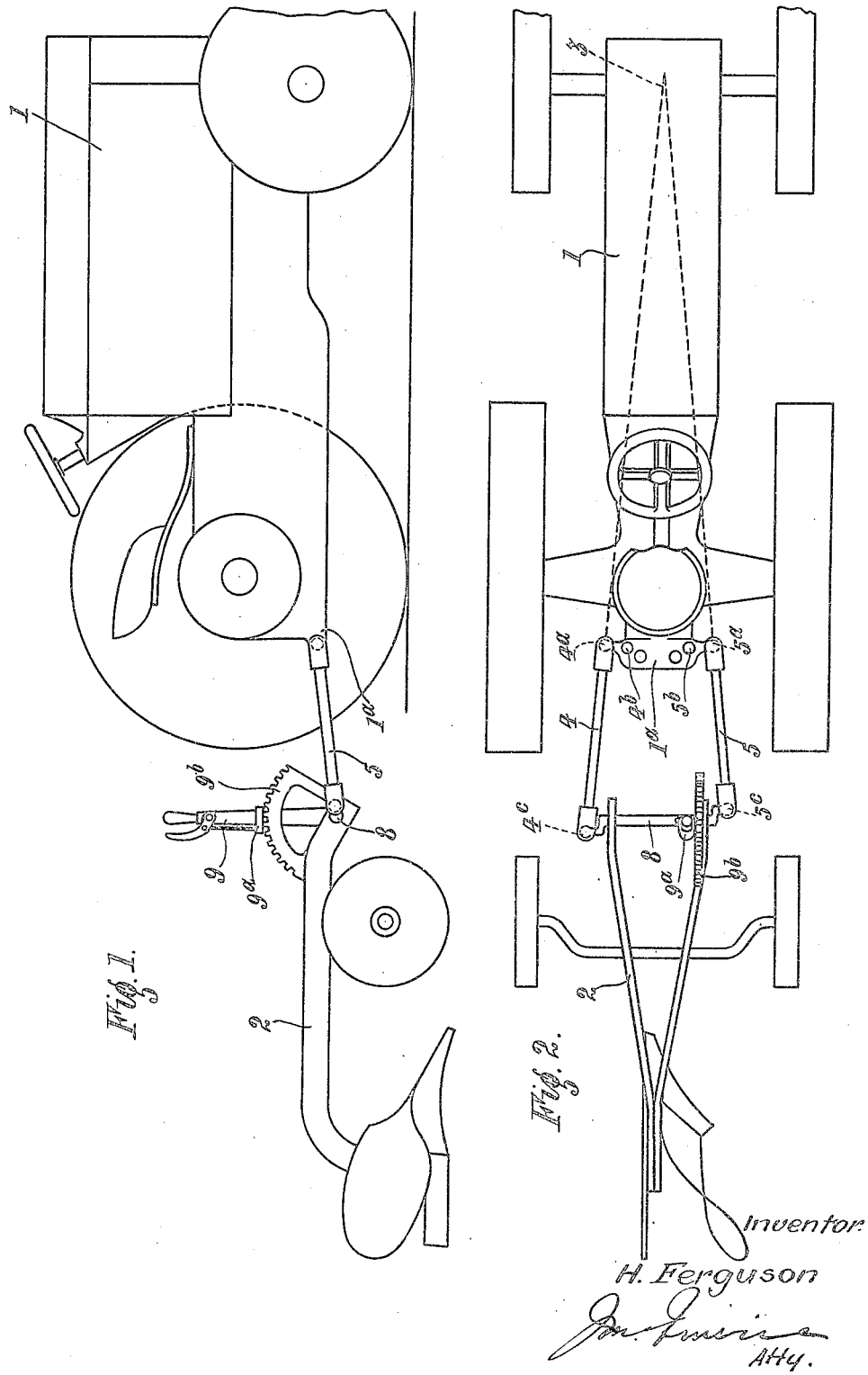

Fig. 1.

Fig. 2.

Inventor
H. Ferguson
Jm. Emmins
Atty.