June 6, 1939. E. B. BENSON 2,161,242

ICE INHIBITING ASSEMBLY FOR AIRPLANES

Filed Feb. 26, 1938 2 Sheets-Sheet 1

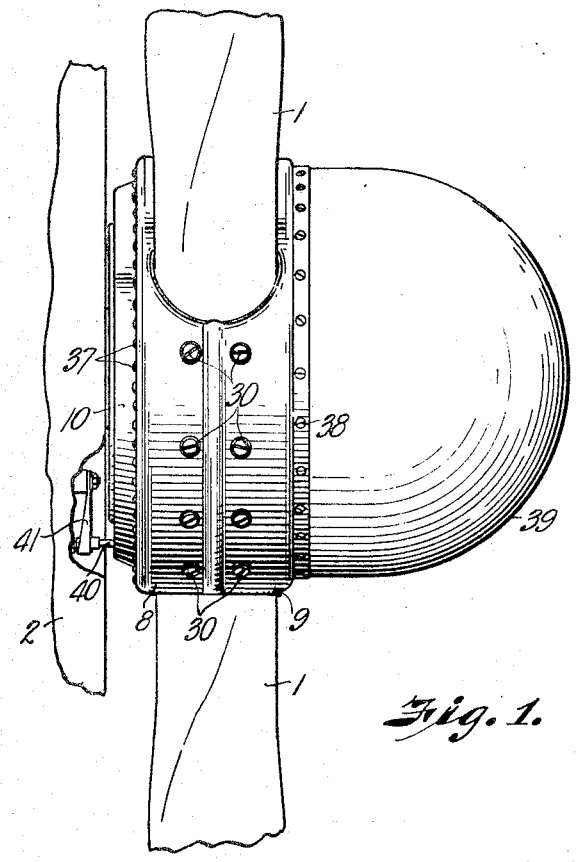

Fig. 1.

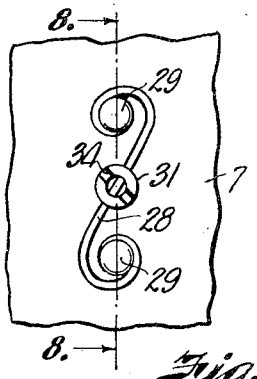

Fig. 7.

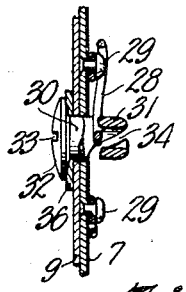

Fig. 8.

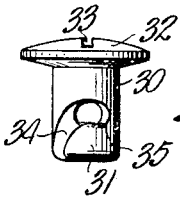

Fig. 9.

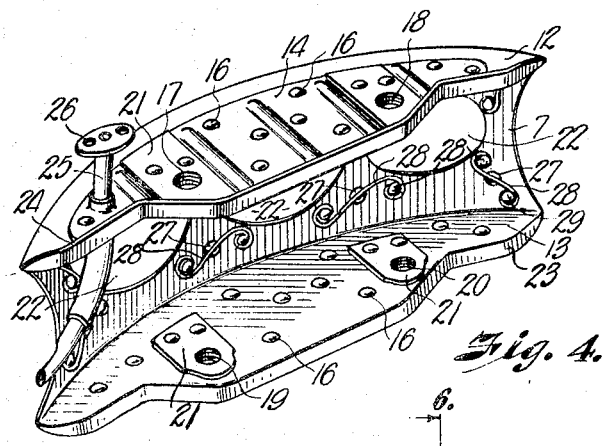

Fig. 4.

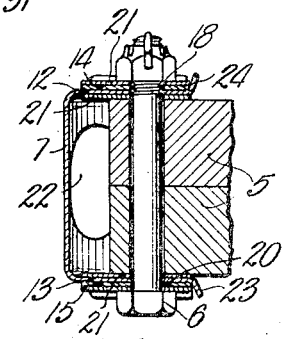

Fig. 6.

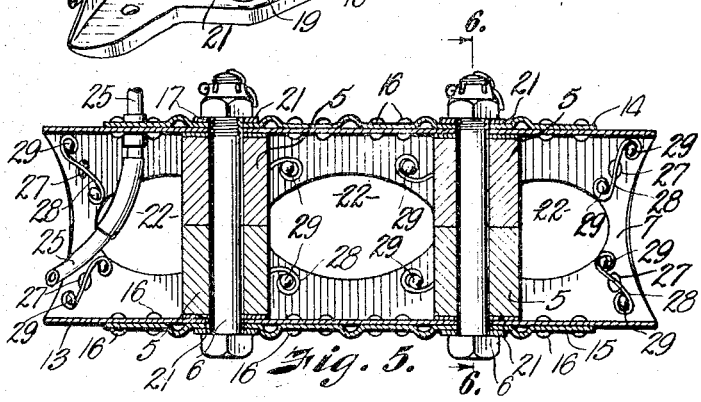

Fig. 5.

INVENTOR
Edward B. Benson
BY Thos. E. Peafield
ATTORNEY