Oct. 4, 1960 R. M. JACKSON 2,954,642

HEARTBEAT MECHANISM

Filed Aug. 12, 1957

FIG. 1

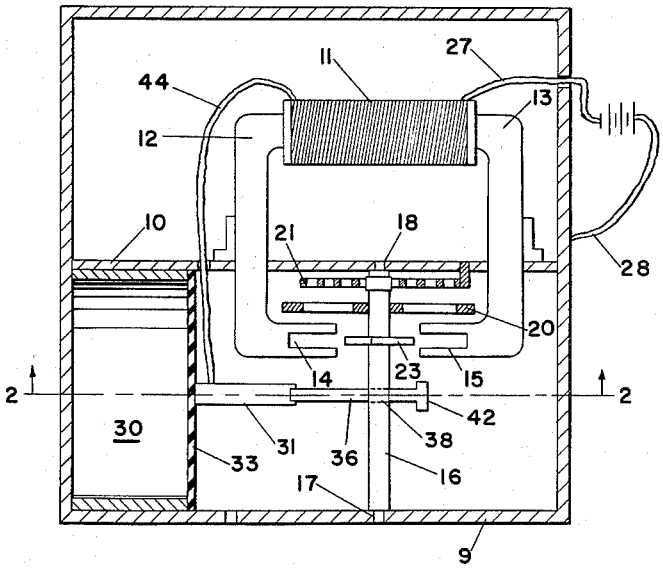

FIG. 2

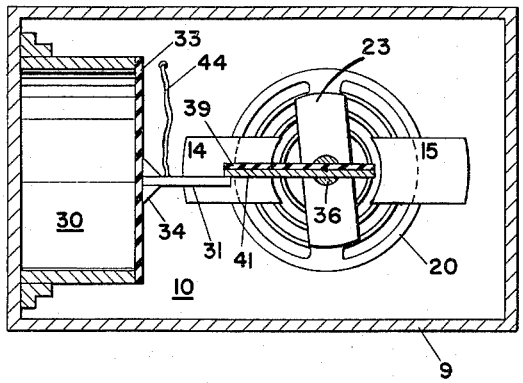

FIG. 3

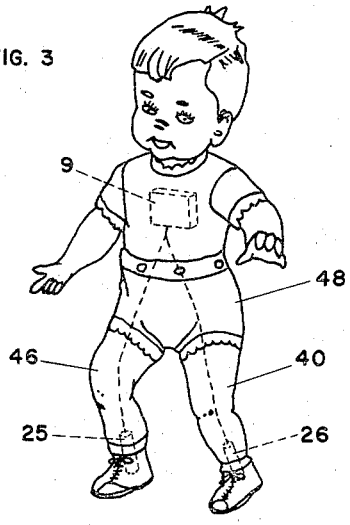

INVENTOR

RODERICK M. JACKSON

BY M. W. Gould

ATTORNEY