Sheet 1

Margaret E. Knight

PATENTED JUL 11 1871

116842

Bag Machine

Fig: 1

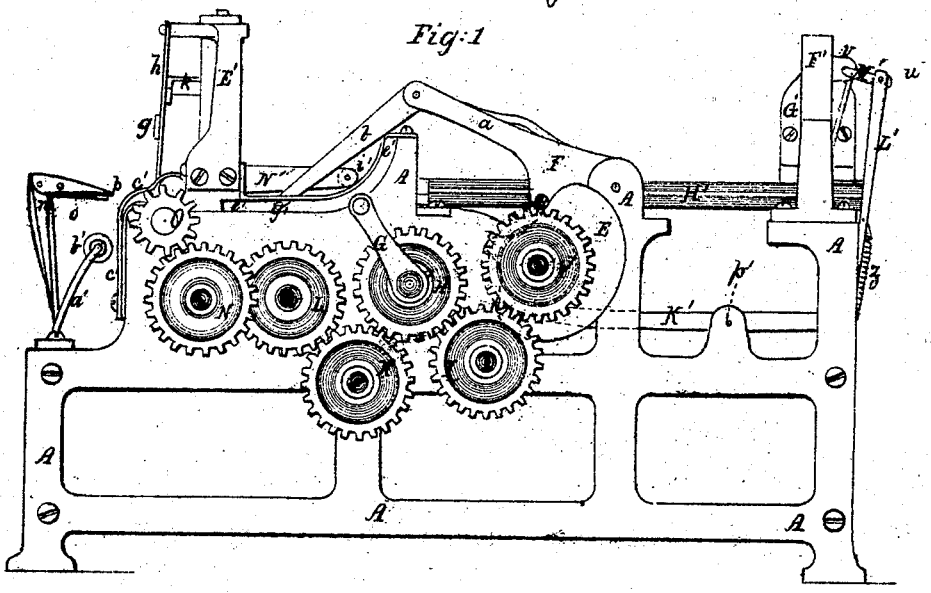

Fig: 2

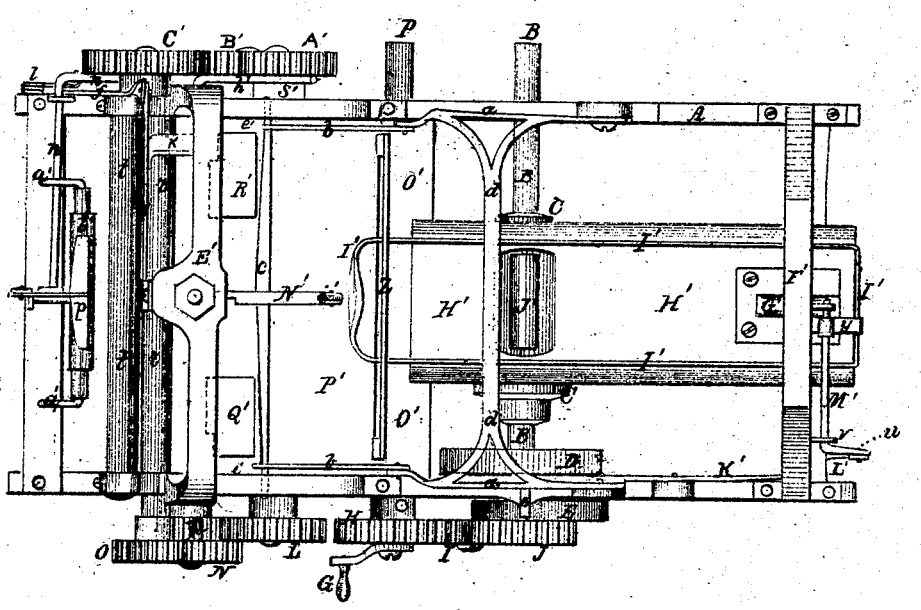

Witnesses
A. C. Bradley
Geo C. Lambright

Inventor
Margaret E. Knight
By her Attorney
Chas. F. Sansburn