No. 812,442. PATENTED FEB. 13, 1906.

W. E. NICKERSON.

METHOD OF HARDENING.

APPLICATION FILED SEPT. 26, 1903.

2 SHEETS—SHEET 2.

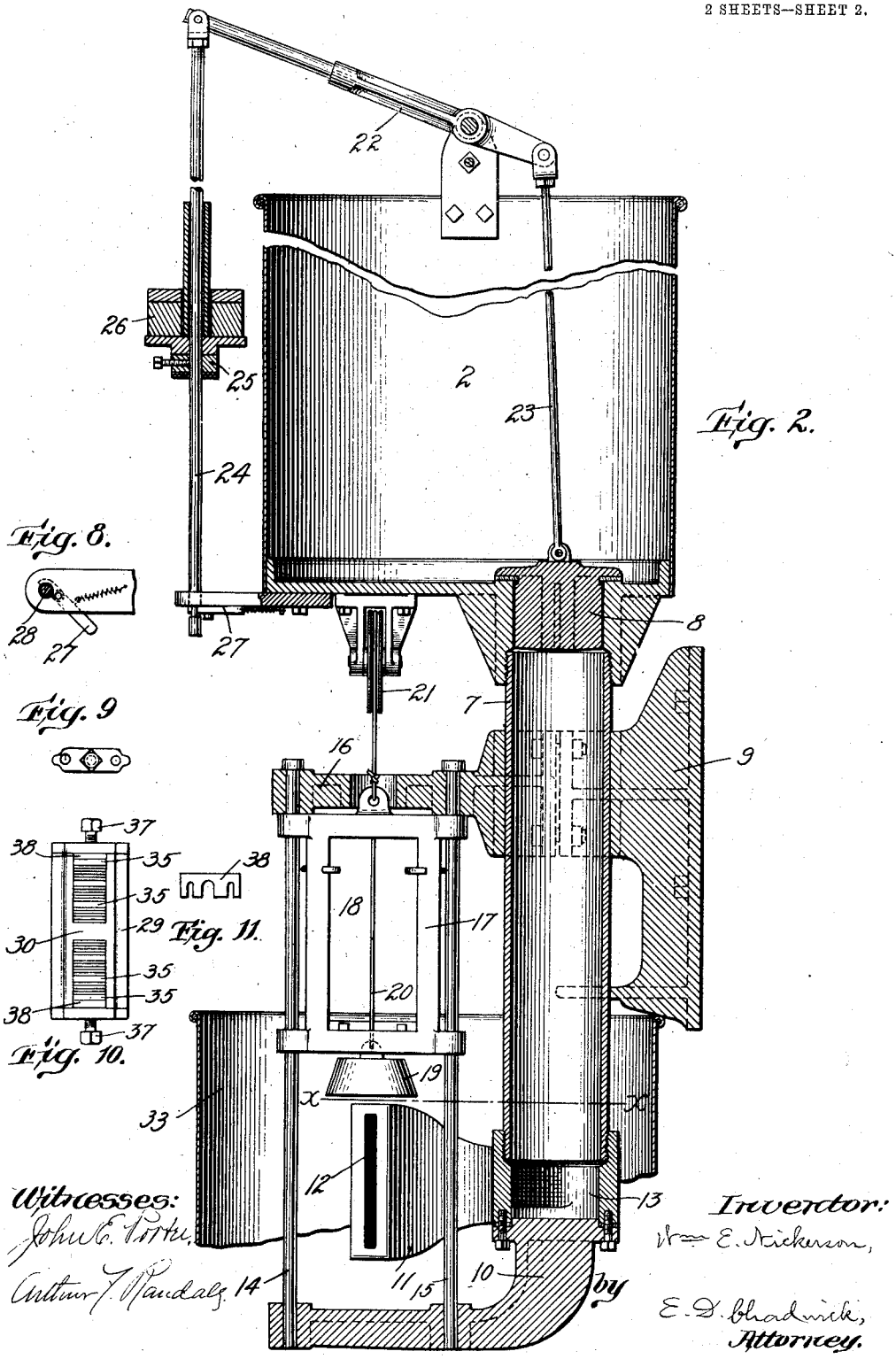

Witnesses:
John E. Porter,
Arthur T. Randall.

Inventor:
Wm E. Nickerson,
by
E. D. Chadwick,
Attorney.