No. 812,442. PATENTED FEB. 13, 1906.

W. E. NICKERSON.

METHOD OF HARDENING.

APPLICATION FILED SEPT. 26, 1903.

2 SHEETS—SHEET 1.

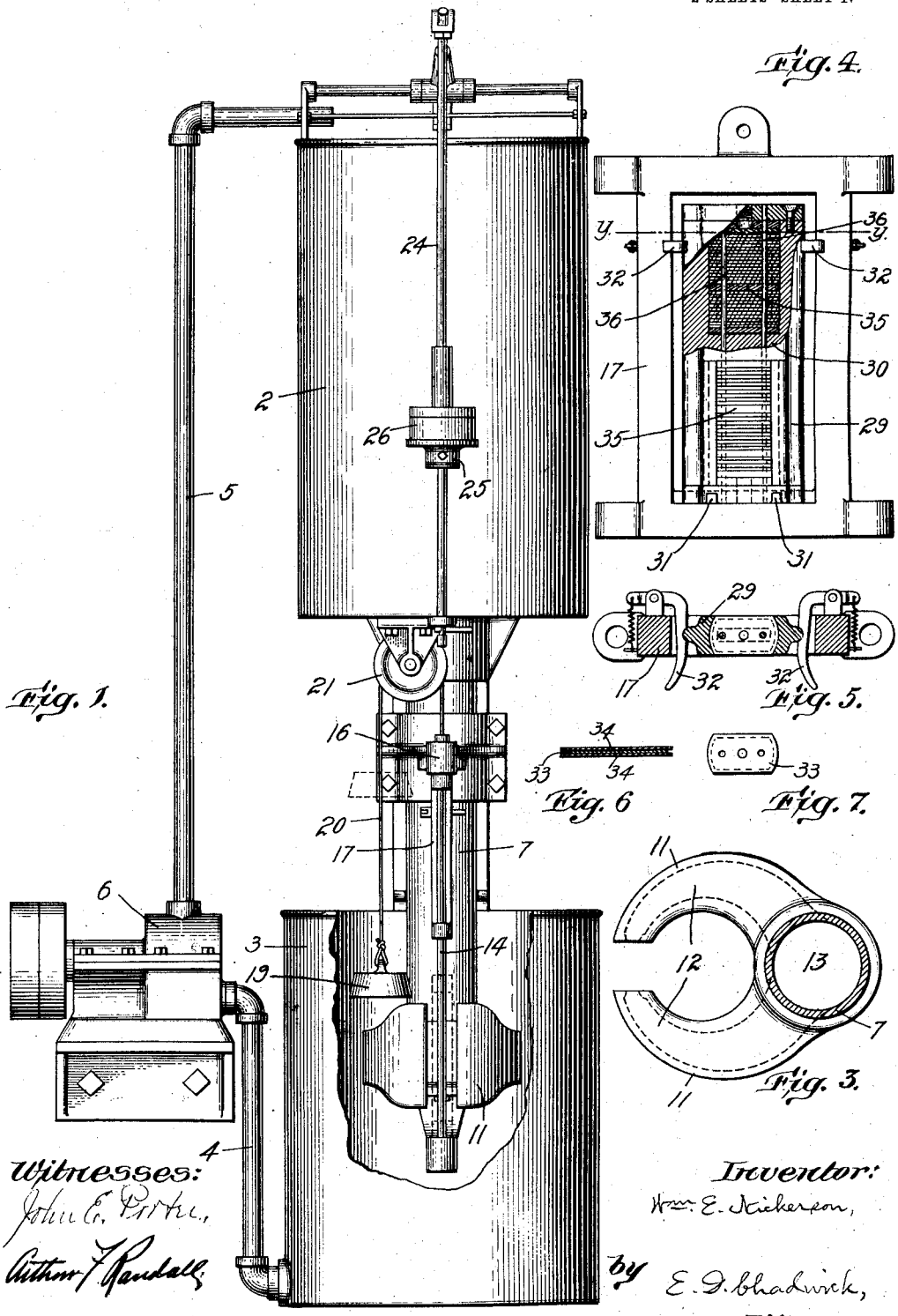

Witnesses:
John E. Pirkl,
Arthur J. Randall,

Inventor:
Wm. E. Nickerson,
by E. G. Chadwick,
Attorney.