(No Model.) 2 Sheets—Sheet 1.

P. HINKLE.

GRAVITY PLEASURE ROAD.

No. 307,942. Patented Nov. 11, 1884.

Fig. 1.

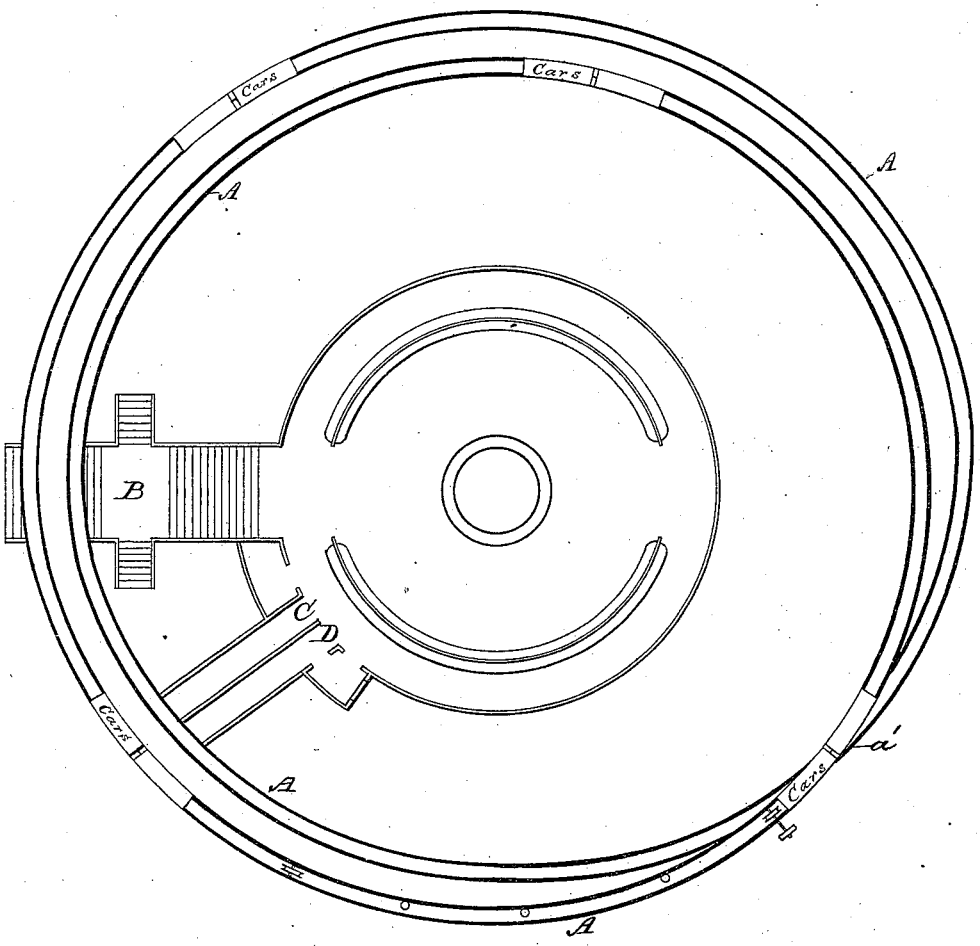

Fig. 2.

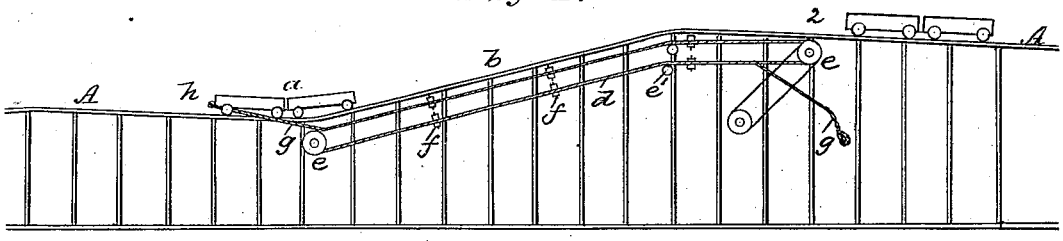

Witnesses:
J. C. Brecht
J. R. Nottingham

Inventor:
Philip Hinkle
by R. K. Evans
Attorney.

N. PETERS, Photo-Lithographer, Washington, D. C.