US005975841A

United States Patent [19]

Lindemuth et al.

[11] **Patent Number: 5,975,841**

[45] **Date of Patent: Nov. 2, 1999**

[54] **HEAT PIPE COOLING FOR TURBINE STATORS**

[75] Inventors: **James E. Lindemuth**, Reading; **William G. Anderson**, Lancaster, both of Pa.

[73] Assignee: **Thermal Corp.**, Georgetown, Del.

[21] Appl. No.: **08/943,626**

[22] Filed: **Oct. 3, 1997**

[51] **Int. Cl.**[6] **F01D 25/08**

[52] **U.S. Cl.** ..... **415/114**; 415/115; 415/116; 415/178; 416/96 R

[58] **Field of Search** ..... 415/114, 115, 415/116, 117, 175, 176, 177, 178; 416/95, 96 R; 165/104.26, 41 S

[56] **References Cited**

U.S. PATENT DOCUMENTS

2,744,723	5/1956	Roush	416/96
3,287,906	11/1966	McCormick	416/95
3,334,685	8/1967	Burggraf et al.	165/104.26
3,627,444	12/1971	Lentz	415/114
3,986,138	10/1976	Neal	165/104.26
4,019,571	4/1977	Kosson et al.	165/104.26
4,108,239	8/1978	Fries	165/104.26
4,118,756	10/1978	Nelson et al.	361/385
4,207,027	6/1980	Barry et al.	416/96 R
4,218,179	8/1980	Barry et al.	415/114
4,401,151	8/1983	Pozsicsanyi	165/104.26
4,565,243	1/1986	Ernst et al.	165/104.26
4,602,679	7/1986	Edelstein et al.	165/104.26
4,770,238	9/1988	Owen	165/104.26
5,076,352	12/1991	Rosenfeld et al.	165/104.26
5,439,351	8/1995	Artt	416/96

Primary Examiner—Edward K. Look
Assistant Examiner—Ninh H. Nguyen
Attorney, Agent, or Firm—Martin Fruitman

[57] **ABSTRACT**

The apparatus is a heat pipe with an internal, multiple chamber evaporator for cooling a turbine engine stator vane. The evaporator comprises leading edge, middle, and trailing edge chambers within the stator vane, with the chambers defined by structural support ribs. Each chamber is constructed with a continuous fine pore metal powder wick coating the internal surfaces of the chamber and enclosing the chamber's central vapor space, except the wick at the very trailing edge of the vane is formed by screen embedded in the adjacent powder wick. The evaporator chambers have capillary arteries which extend through the adiabatic section of the heat pipe and terminate in a condenser wick within a heat sink structure exposed to cooler air. A capillary artery also interconnects the wick of the trailing edge chamber to the wick of the middle chamber.
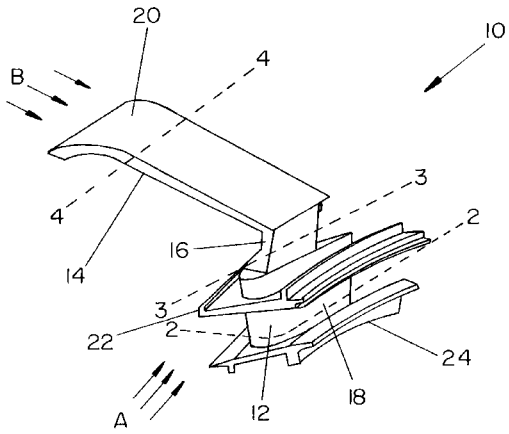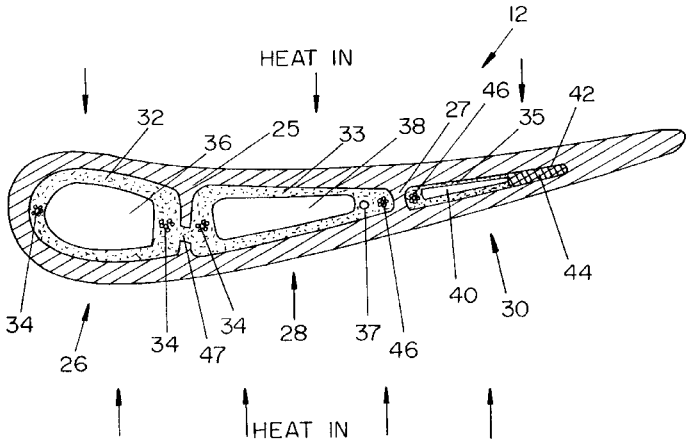
10 Claims, 3 Drawing Sheets