Feb. 22, 1949. C. L. NORDEN 2,462,541

ERECTING SYSTEM FOR GYROSCOPES

Filed Oct. 17, 1945 2 Sheets-Sheet 1

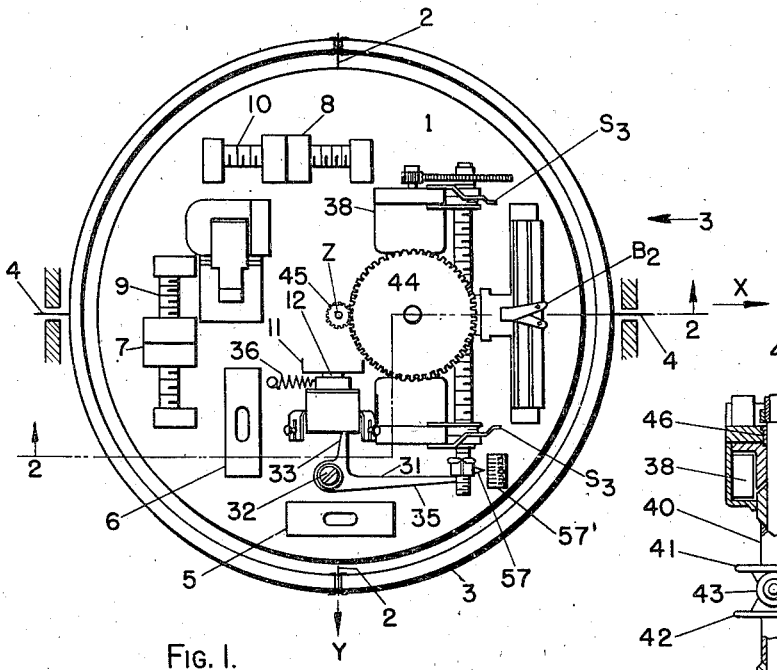

FIG. 1.

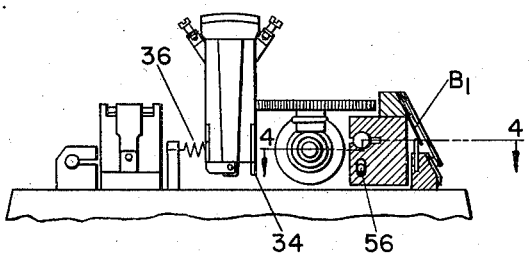

FIG. 2.

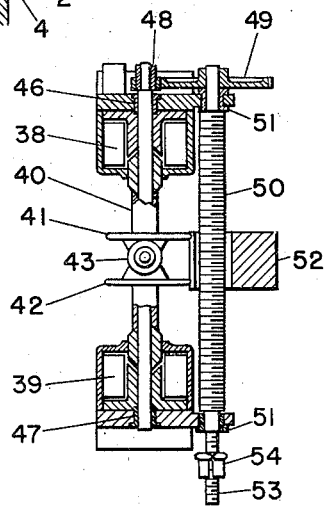

FIG. 4.

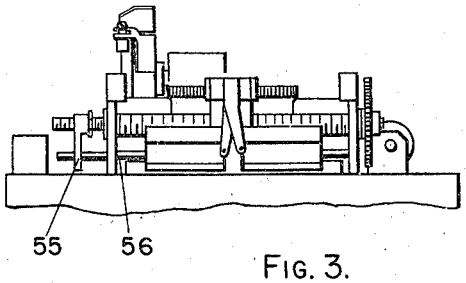

FIG. 3.

INVENTOR
Carl L. Norden
BY
Sawyer & Kennedy
ATTORNEYS