Oct. 14, 1941. L. J. BIRO 2,258,841

FOUNTAIN PEN

Filed April 23, 1941 2 Sheets-Sheet 1

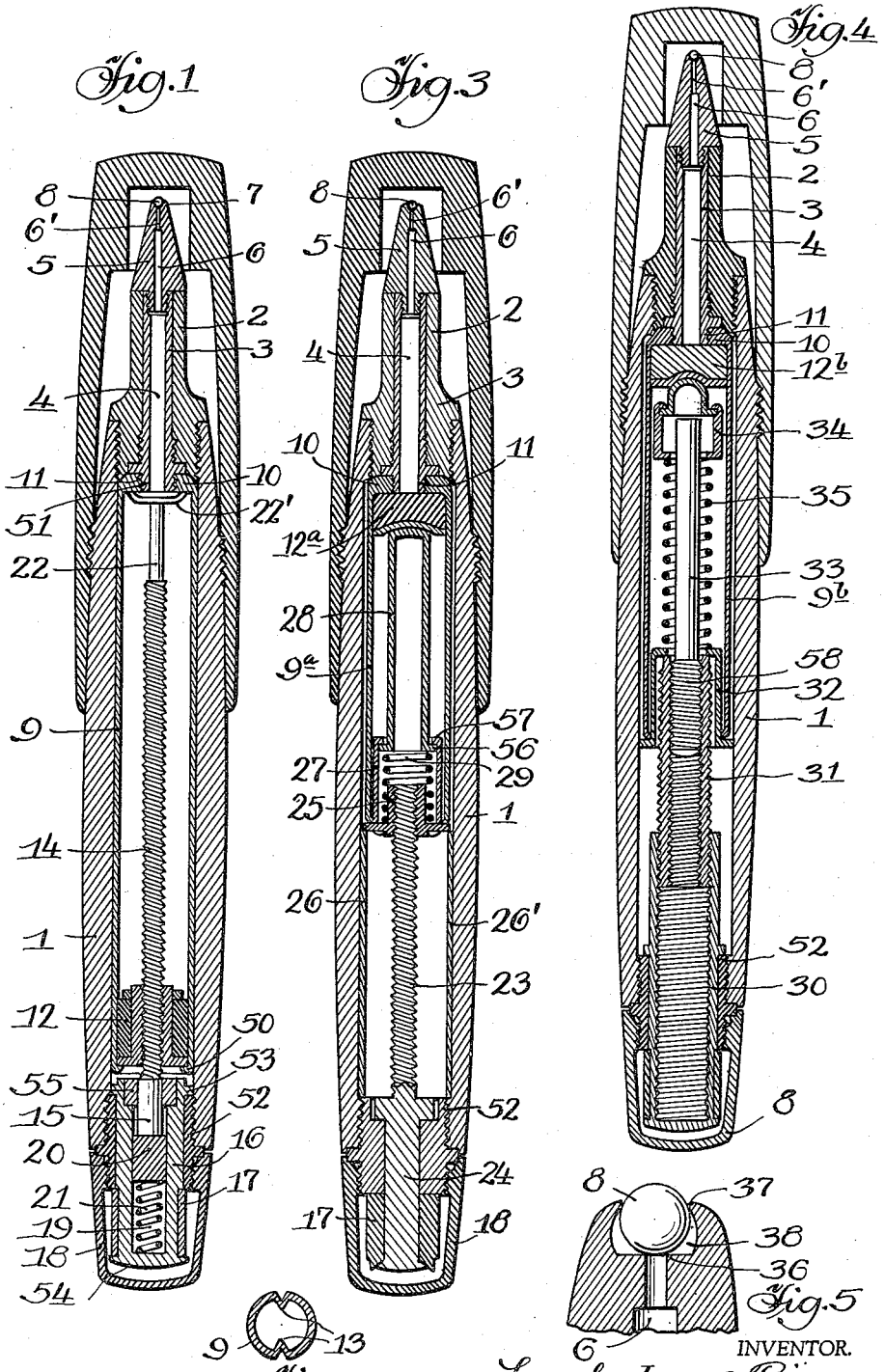

Witness:
Chas. L. Kourah.

INVENTOR.
Laszlo Jozsef Biro,
BY Parkinson & Lane
Attys